MONTGOMERY COUNTY PUBLIC SERVICE AUTHORITY
WATER AND SEWER DESIGN & CONSTRUCTION STANDARDS
THIRD EDITION
JULY 2012

SECTION FOUR - LIST OF SEWER DETAIL DRAWINGS

S#	Title
01	4' Standard Manhole for Pipe 15" or Smaller
02	Straddle Manhole for Pipe 15" or Smaller
03	Outside Drop Manhole (For Use with PVC Pipe)
04	Mainline or Lateral Inside Drop Manhole (For Use with PVC Pipe)
05	Watertight Manhole Frame and Cover
06	Sampling Structure
07	Sanitary Sewer Lateral
08	Sanitary Sewer Lateral for Deep Sewers
09	Sanitary Sewer Lateral for Special Cases
10	Combined 6" by Two 4" Laterals
11	Force Main to Gravity Lateral Conn.
12	Public Force Main Connection to Manhole
13	Traffic Bearing Cleanout Box
14	Alternate Traffic Bearing Cleanout Box
15	Stone Bedding
16	Concrete Encased Pipe
17	Joining Dissimilar Pipe
18	Concrete Pier
19	Anchor Block
20	Pipe Support in Casing Pipe
21	Type 1 Manhole Vent - Out of Right of Way
22	Type 2 Manhole Vent
23	Universal, Combination or Air Release Assembly for use on Sewer Force Main
24	Pavement Replacement - Open Cut Roadway
25	Sanitary Sewer Abandonment at a Manhole
26	Sanitary Sewer Manhole Abandonment
27	Sanitary Sewer Easements
28	Chain Link Fence
29	Air Testing Back Pressure Equivalency Table
30	Air Testing Time for 1 PSI Drop
31	Air Testing Time for 0.5 PSI Drop

NOTES:

1. ALL MANHOLE FRAMES AND COVERS SHALL BE EAST JORDAN MODELS 1045Z AND 1040AGS OR APPROVED EQUAL.
2. STEPS TO BE VERTICALLY ALIGNED.
3. MANHOLES WITH PIPES ENTERING OR EXITING WITH SLOPES GREATER THAN 12% SHALL HAVE THE MANHOLE BOOT CAST IN THE BASE AT THE SAME SLOPE.
4. THE FRAME AND COVER SHALL BE PROPERLY ALIGNED WITH THE 2 FOOT OPENING OF THE MANHOLE STRUCTURE AND BOLTED IN PLACE.
5. FLAT TOP MANHOLES MAY ONLY BE SUBSTITUTED WITH THE PERMISSION OF THE PSA DIRECTOR. WHEN USED, THE ECCENTRIC OPENING MUST LINE UP WITH THE STEPS.
6. SAMPLING MANHOLES IN TRAFFIC AREAS SHALL BE CONSTRUCTED AS PER MANHOLE DETAILS.
7. GROUT/CEMENT/CONCRETE/MORTAR SHALL NOT BE PLACED IN/ON ANY SECTION OF THE MANHOLE IN THE FIELD.
8. EXTERIOR SURFACES OF ALL CONCRETE MANHOLE SECTIONS SHALL HAVE TWO COATS (MINIMUM 16 DRY MILS) OF COAL TAR EPOXY, KOPPERS CO. BITUMASTIC 300-M OR EQUAL.
9. JOINTS BETWEEN ALL CONCRETE MANHOLE SECTIONS SHALL BE SEALED BY EXTERNAL INSTALLATION OF AN 8-INCH WIDE 'BUTYL-TITE' WRAP OR APPROVED EQUAL PRODUCT.

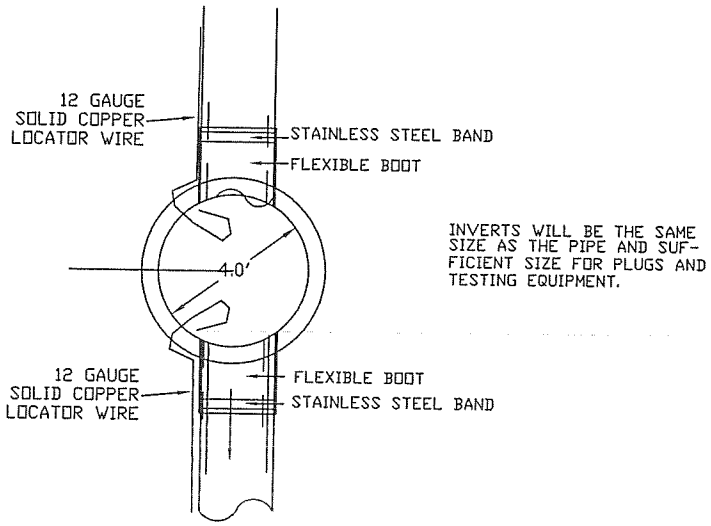

SECTION A-A

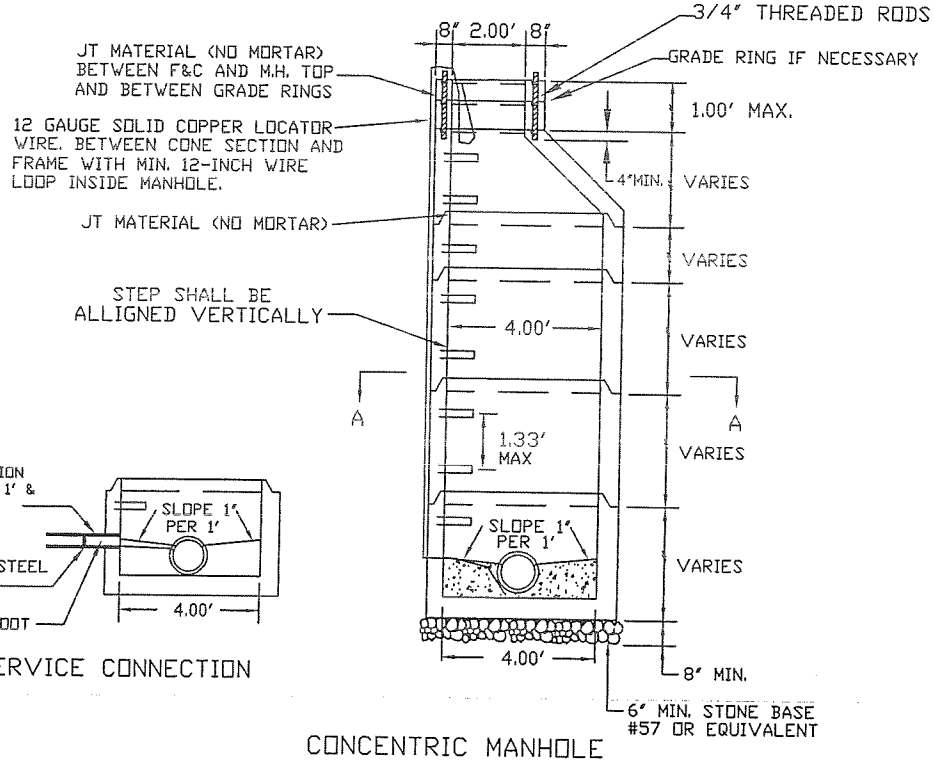

CONCENTRIC MANHOLE WITH PRECAST INVERT

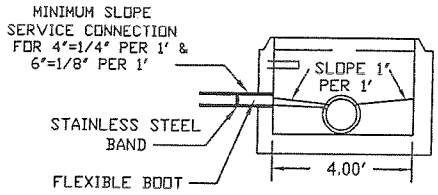

SERVICE CONNECTION

REVISIONS		NO.	DATE
NO.	DATE	3	5/01/12
ORIGINAL	12/01/06		
1	9/01/07		
2	10/25/07		

4' STANDARD MANHOLE FOR PIPE 15" OR SMALLER

DRAWING S-01

MONTGOMERY COUNTY PUBLIC SERVICE AUTHORITY
CHRISTIANSBURG, VIRGINIA

CONSTRUCTION STANDARDS

NOTES:

1. ALL MANHOLE FRAMES AND COVERS SHALL BE EAST JORDAN MODELS 1045Z AND 1040AGS OR APPROVED EQUAL.
2. STEPS TO BE VERTICALLY ALIGNED.
3. THE ENTIRE MANHOLE STRUCTURE INCLUDING FRAME AND COVER SHALL BE INSTALLED BEFORE CUTTING THE TOP OF THE SEWER PIPE IN THE MANHOLE. PSA PERSONNEL TO BE PRESENT DURING INSTALLATION.
4. THE FRAME AND COVER SHALL BE PROPERLY ALIGNED WITH THE 2 FOOT OPENING OF THE MANHOLE STRUCTURE AND BOLTED IN PLACE.
5. RISER AND OTHER SECTIONS SHALL NOT BE INSTALLED FOR A MINIMUM OF 24 HOURS AFTER POURING OF BASE, BENCH, & INVERT.
6. SUB-BASE SHALL BE COMPACTED TO 100% PROCTOR AND VERIFIED BY LABORATORY TESTING.
7. EXTERIOR SURFACES OF ALL CONCRETE MANHOLE SECTIONS SHALL HAVE TWO COATS (MINIMUM 16 DRY MILS) OF COAL TAR EPOXY, KOPPERS CO. BITUMASTIC 300-M OR EQUAL.
8. JOINTS BETWEEN ALL CONCRETE MANHOLE SECTIONS SHALL BE SEALED BY EXTERNAL INSTALLATION OF AN 8-INCH WIDE 'BUTYL-TITE' WRAP OR APPROVED EQUAL PRODUCT.

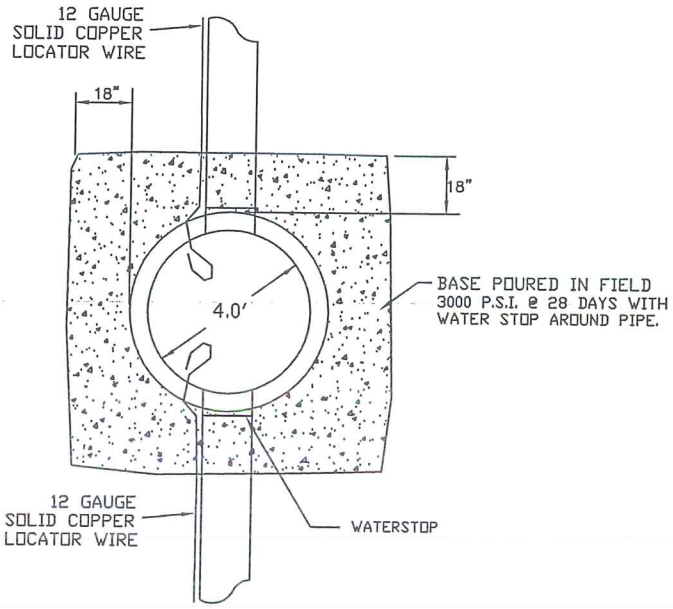

SECTION A-A

INVERTS WILL BE THE SAME SIZE AS THE PIPE AND TESTING EQUIPMENT.

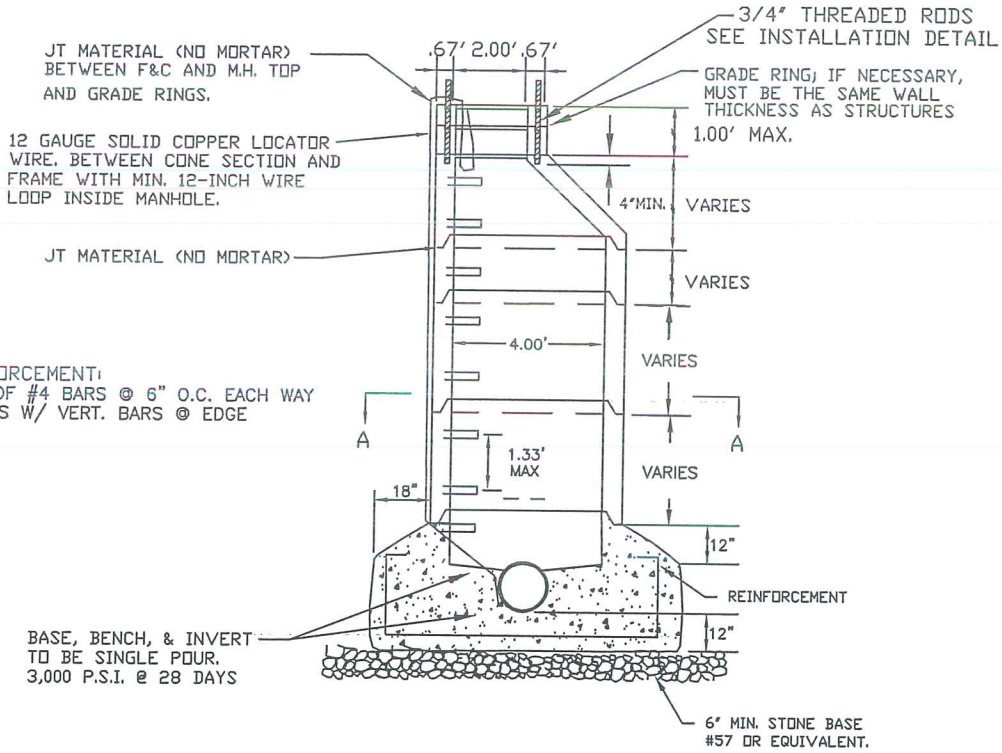

REVISIONS		NO.	DATE		DRAWING
NO.	DATE	3	5/01/12	STRADDLE MANHOLE FOR PIPE 15" OR SMALLER	S-02
ORIGINAL	12/01/06				
1	9/01/07				
2	10/25/07				

NOTES:

1. ALL MANHOLE FRAMES AND COVERS SHALL BE EAST JORDAN MODELS 1045Z AND 1040AGS OR APPROVED EQUAL.
2. STEPS TO BE VERTICALLY ALIGNED.
3. THE FRAME AND COVER SHALL BE PROPERLY ALIGNED WITH THE 2 FOOT OPENING OF THE MANHOLE STRUCTURE AND BOLTED IN PLACE.
4. TOP INVERT LINE SHALL NOT ENTER THROUGH RISER (CONE) SECTION OR JOINT.
4. GROUT/CEMENT/CONCRETE/MORTAR SHALL NOT BE PLACED IN/ON ANY SECTION OF THE MANHOLE IN THE FIELD.
5. EXTERIOR SURFACES OF ALL CONCRETE MANHOLE SECTIONS SHALL HAVE TWO COATS (MINIMUM 16 DRY MILS) OF COAL TAR EPOXY, KOPPERS CO. BITUMASTIC 300-M OR EQUAL.
6. JOINTS BETWEEN ALL CONCRETE MANHOLE SECTIONS SHALL BE SEALED BY EXTERNAL INSTALLATION OF AN 8-INCH WIDE "BUTYL-TITE" WRAP OR APPROVED EQUAL PRODUCT.

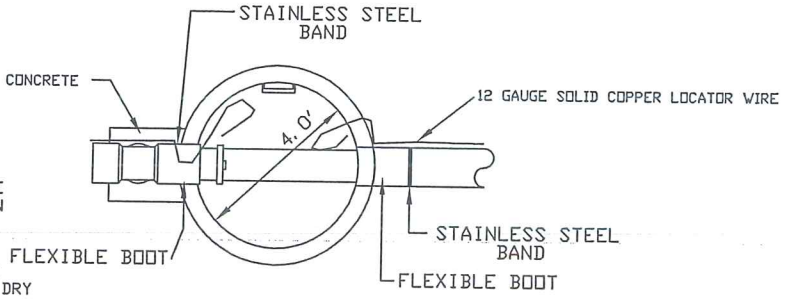

SECTION A-A

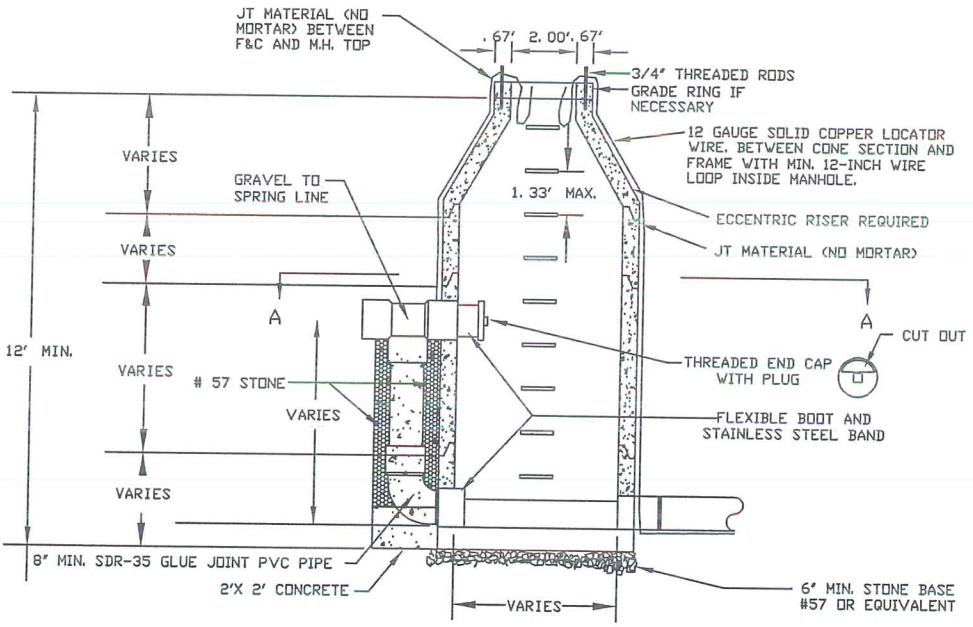

REVISIONS		NO.	DATE
NO.	DATE	3	5/01/12
ORIGINAL	12/01/06		
1	9/01/07		
2	10/25/07		

OUTSIDE DROP MANHOLE

(FOR USE WITH PVC PIPE)

DRAWING S-03

NOTES:

1. ALL MANHOLE FRAMES AND COVERS SHALL BE EAST JORDAN MODELS 1045Z AND 1040AGS OR APPROVED EQUAL.
2. STEPS TO BE VERTICALLY ALIGNED.
3. THE FRAME AND COVER SHALL BE PROPERLY ALIGNED WITH THE 2 FOOT OPENING OF THE MANHOLE STRUCTURE AND BOLTED IN PLACE.
4. GROUT/CEMENT/CONCRETE/MORTAR SHALL NOT BE PLACED IN/ON ANY SECTION OF THE MANHOLE IN THE FIELD.
5. EXTERIOR SURFACES OF ALL CONCRETE MANHOLE SECTIONS SHALL HAVE TWO COATS (MINIMUM 16 DRY MILS) OF COAL TAR EPOXY, KOPPERS CO. BITUMASTIC 300-M OR EQUAL.
6. JOINTS BETWEEN ALL CONCRETE MANHOLE SECTIONS SHALL BE SEALED BY EXTERNAL INSTALLATION OF AN 8-INCH WIDDE "BUTYL-TITE" WRAP OR APPROVED EQUAL PRODUCT.

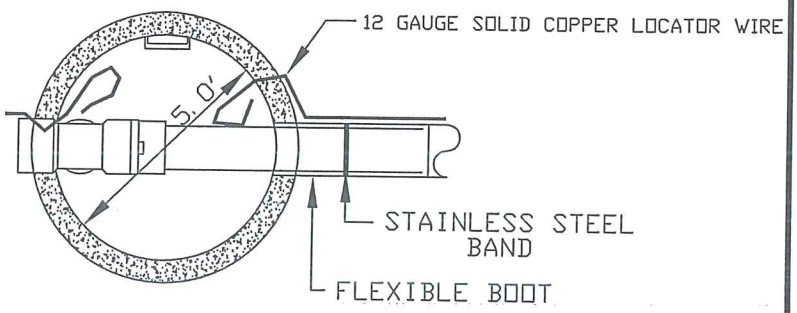

SECTION A-A

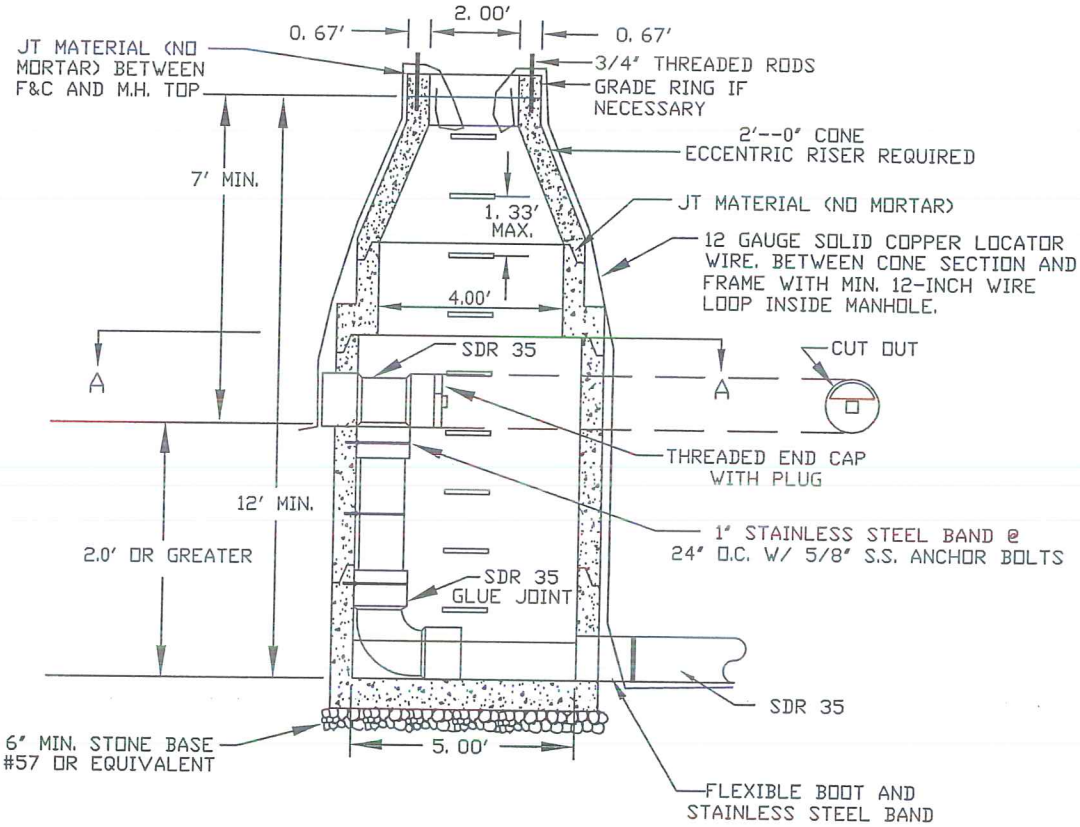

NOTE : 6' DIAMETER MANHOLE REQUIRED FOR TWO INSIDE DROP CONNECTIONS (MAIN LINE OR LATERAL)

REVISIONS		NO.	DATE
NO.	DATE	3	5/01/12
ORIGINAL	12/01/06		
1	9/01/07		
2	10/25/07		

MAINLINE OR LATERAL INSIDE DROP MANHOLE
(FOR USE WITH PVC PIPE)

DRAWING
S-04

WATERTIGHT MANHOLE FRAME MODEL #1045Z BY EAST JORDAN IRON WORKS, INC. OR APPROVED EQUIVALENT.

NOTE:
APPROVED WATER SEALANT
REQUIRED AT ALL JOINTS.

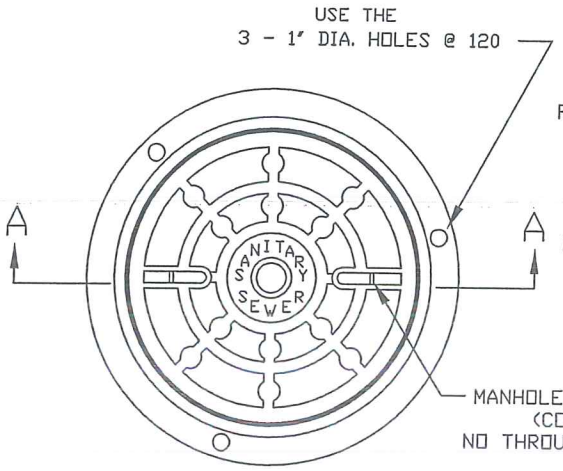

PLAN

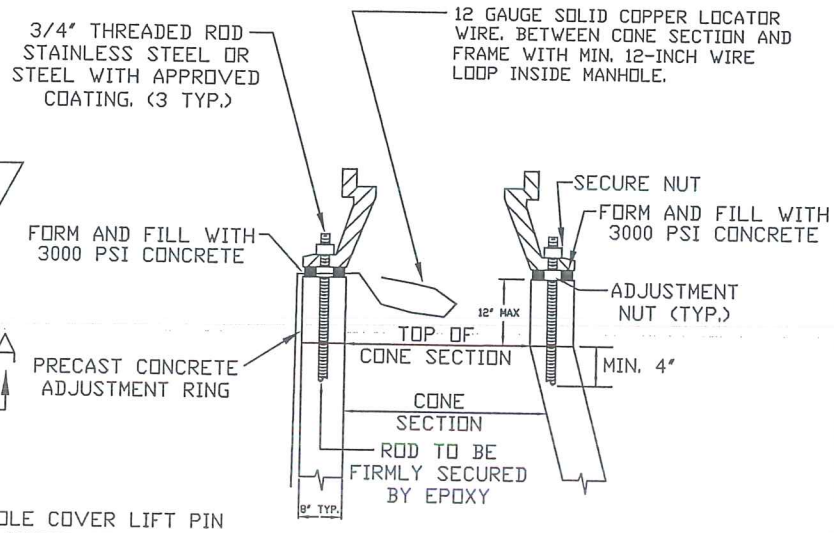

INSTALLATION DETAIL
FOR ALL FRAMES AND COVERS

STANDARD MANHOLE COVER MODEL #1040AGS BY EAST JORDAN IRON WORKS, INC. OR APPROVED EQUIVALENT.

NOTE: COVERS WITH CAM BOLT LOCKING SYSTEM TO BE PROVIDED WHERE MANHOLES ARE SUBJECT TO FLOODING AND/OR SEWER SURCHARGING.

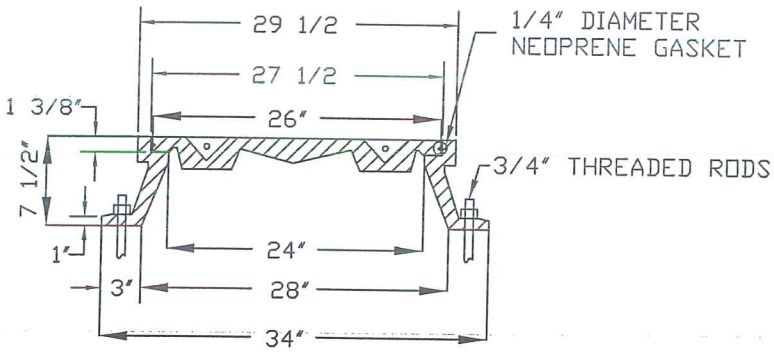

SECTION A-A

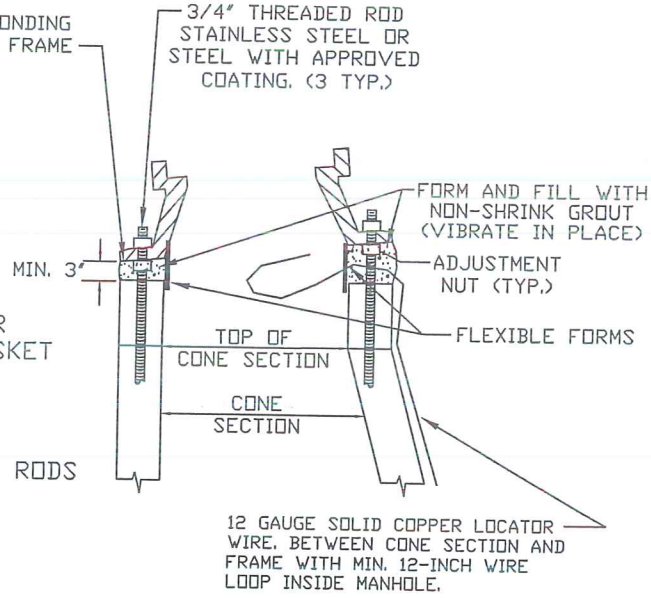

INSTALLATION DETAIL
FOR SLOPE ADJUSTMENT

REVISIONS			
NO.	DATE		
ORIGINAL	12/01/06		
1	09/01/07		
2	07/25/12		

WATERTIGHT MANHOLE
MANHOLE FRAME & COVER

DRAWING
S-05

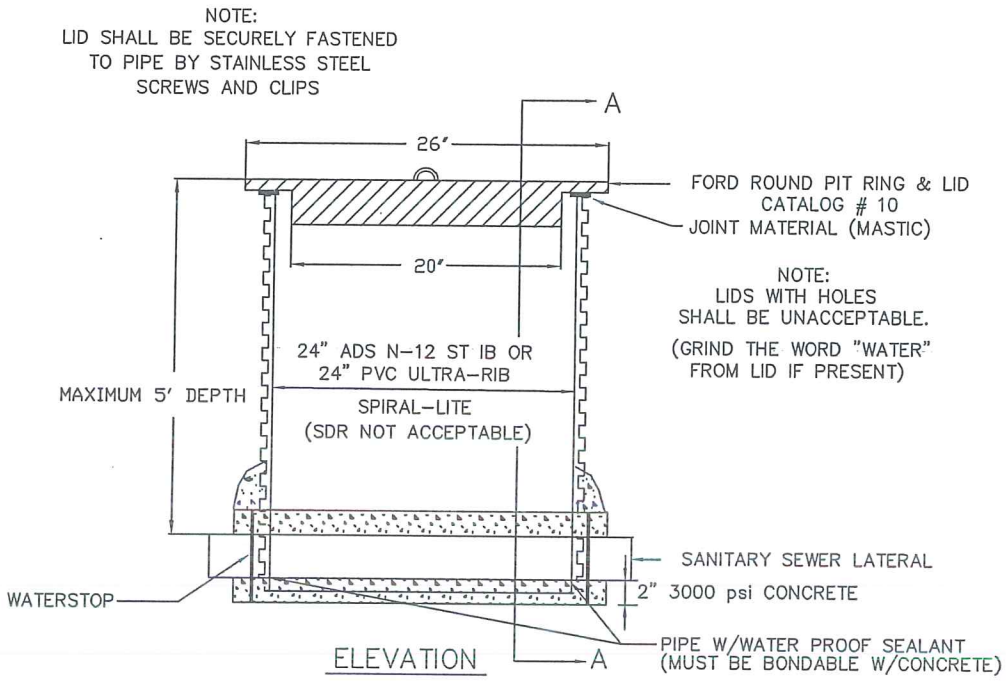

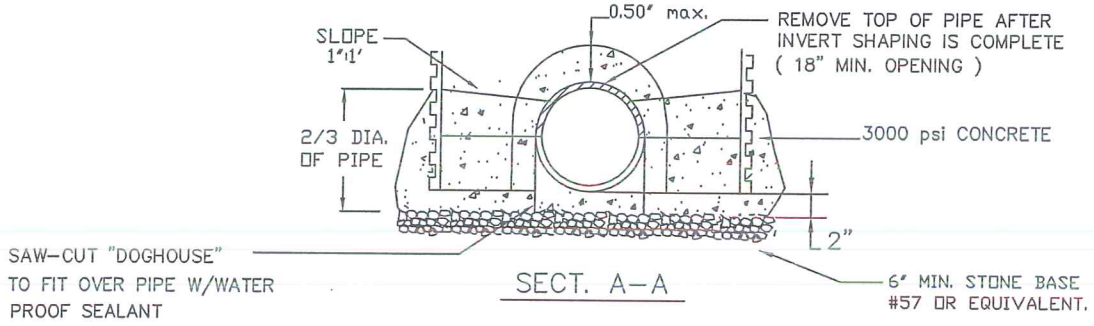

NOTES:

1. NOT ACCEPTABLE FOR USE IN TRAFFIC AREAS OR AREAS SUBJECT TO FLOODING.

2. VACUUM OR EXFILTRATION TESTING SHALL BE USED. VACUUM TESTING SHALL MEET THE SAME STANDARD FOR CONCRETE MANHOLES. EXFILTRATION TESTING SHALL HAVE NO LEAKAGE WITHIN 1 HOUR.

3. 2' DIA. 3000 PSI CONCRETE WELL CASING MAY BE SUBSTITUTED FOR ADS N-12 OR ULTRA-RIB PIPE. VERTICAL JOINTS WILL NOT BE ALLOWED IN WELL CASING.

4. STANDARD 4' DIAMETER CONCRETE MANHOLES SHALL BE INSTALLED WHERE DEPTH EXCEEDS 5'.

REVISIONS			
NO.	DATE		
ORIGINAL	12/01/06		
1	5/01/12		

SAMPLING STRUCTURE DETAIL

DRAWING S-06

GENERAL NOTES:

1. TRAFFIC BEARING BOX REQUIRED IN TRAFFIC AREAS.
2. ALL PIPE AND FITTINGS SHALL BE OF SIMILAR MATERIAL.
3. ALL PIPE SHALL BE OF SAME SIZE.
4. NO BENDS ARE ALLOWED IN THE LATERAL FROM THE MAIN TO THE CLEAN-OUT STACK WYE. (EXCEPT AS NOTED)
5. ALL MAIN LINE TAPS ON ACTIVE MAINS SHALL BE SUPERVISED PERFORMED BY PSA.
6. PIPING BEHIND CLEANOUT TO BE INSTALLED PER APPLICABLE BUILDING CODE.
7. MINIMUM LATERAL SIZE:
   4' FOR RESIDENTIAL SERVICE
   6' FOR NON-RESIDENTIAL SERVICE
8. MINIMUM COVER FOR ALL SEWER LATERALS SHALL BE THREE (3') FEET

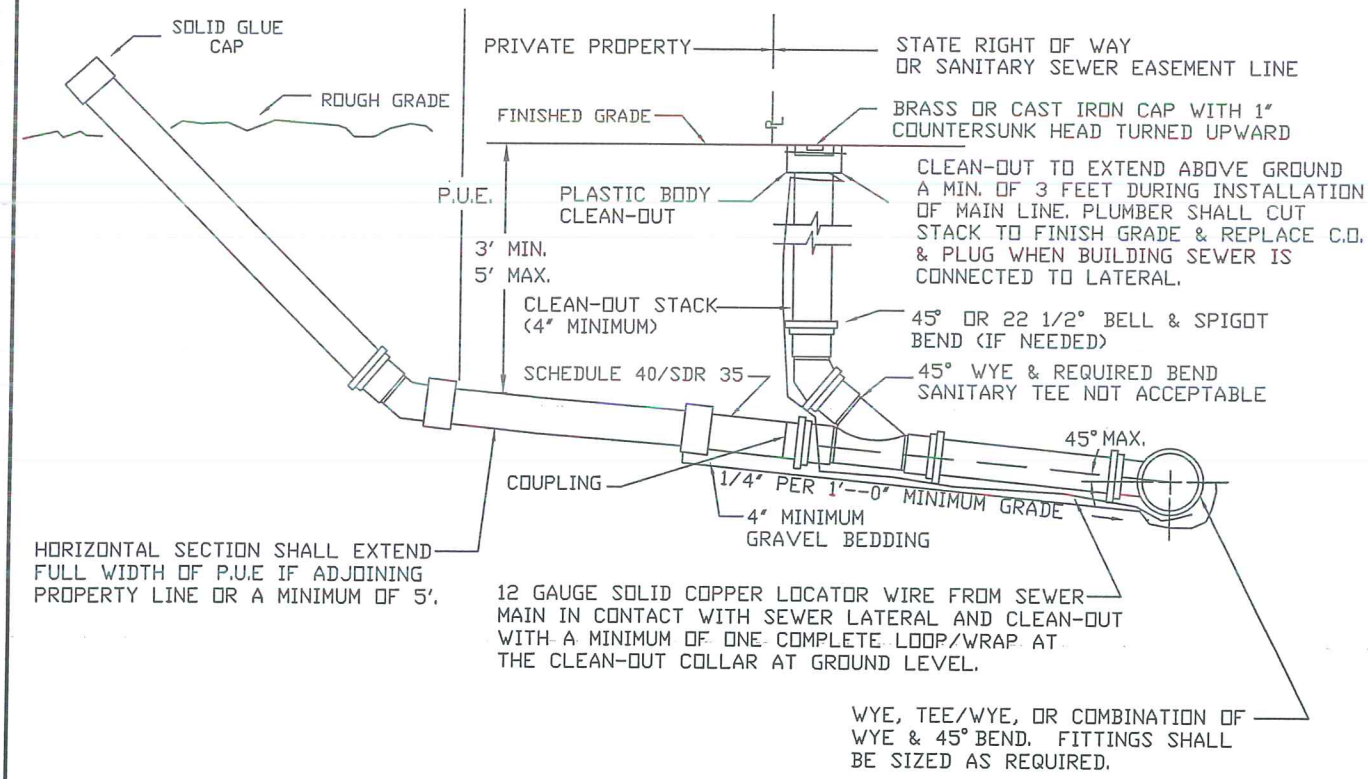

REVISIONS				SANITARY SEWER LATERAL	DRAWING S-07
NO.	DATE				
ORIGINAL	12/01/06				
1	9/01/07				
2	5/01/12				

GENERAL NOTES:

1. TRAFFIC BEARING BOX REQUIRED IN TRAFFIC AREAS.
2. ALL PIPE AND FITTINGS SHALL BE OF SIMILAR MATERIAL.
3. ALL PIPE SHALL BE OF SAME SIZE.
4. NO BENDS ARE ALLOWED IN THE LATERAL FROM THE MAIN TO THE CLEAN-OUT STACK WYE. (EXCEPT AS NOTED)
5. ALL MAIN LINE TAPS ON ACTIVE MAINS SHALL BE SUPERVISED OR PERFORMED BY PSA.
6. PIPING BEHIND CLEANOUT TO BE INSTALLED PER APPLICABLE BUILDING CODE.
7. MINIMUM LATERAL SIZE:
   4' FOR RESIDENTIAL SERVICE
   6' FOR NON-RESIDENTIAL SERVICE

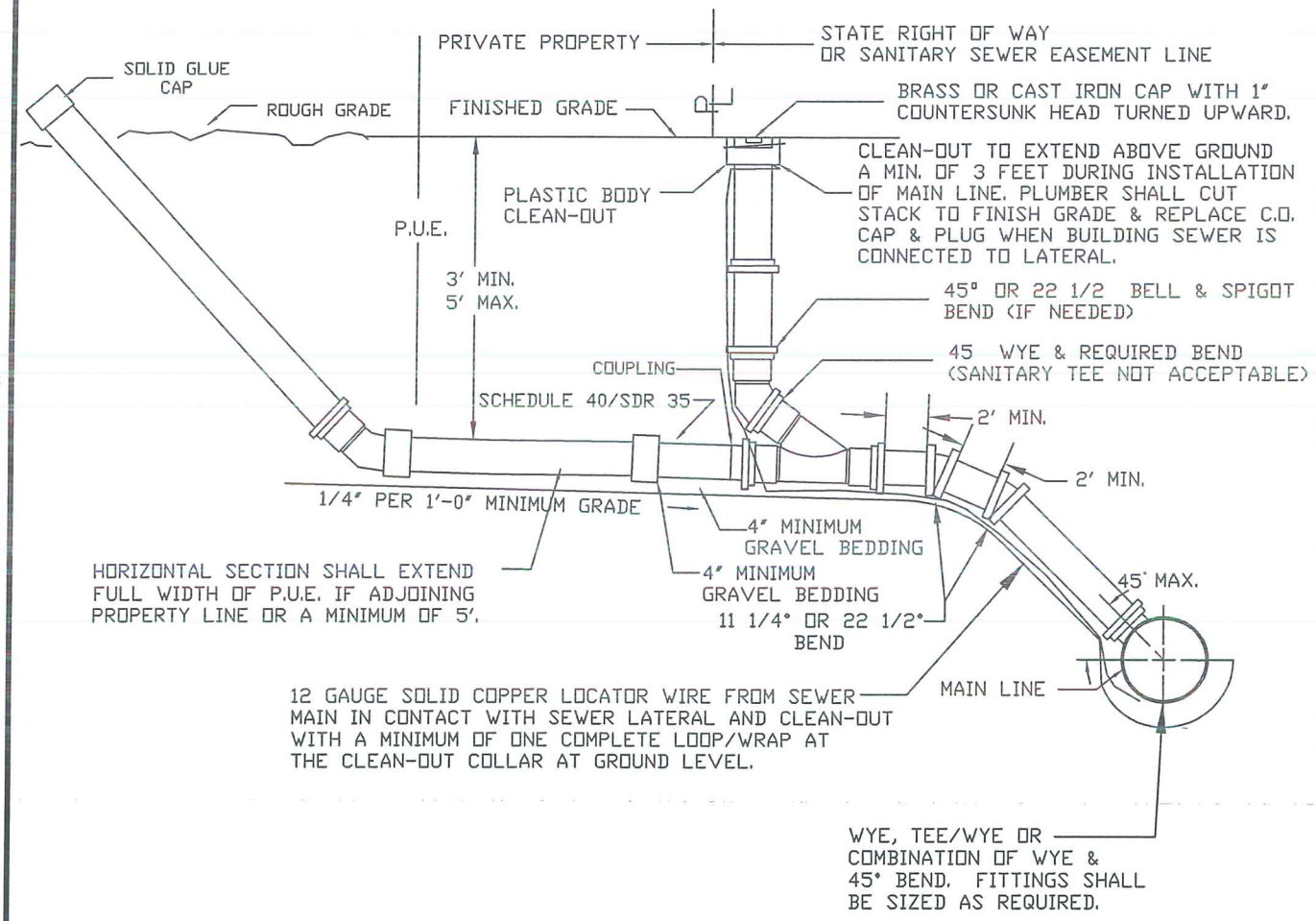

REVISIONS				SANITARY SEWER LATERAL FOR DEEP SEWERS	DRAWING S-08
NO.	DATE				
ORIGINAL	12/01/06				
1	9/01/07				
2	5/01/12				

GENERAL NOTES:

1. THIS CONFIGURATION MAY ONLY BE USED IN SPECIAL CASES WHEN SPECIFICALLY DESIGNED BY THE PROJECT ENGINEER AND INDICATED ON SITE PLANS.
2. ALL PIPE AND FITTINGS SHALL BE OF SAME MATERAL.
3. ALL PIPE SHALL BE OF SAME SIZE.
4. NO BENDS ARE ALLOWED IN THE LATERAL FROM THE MAIN TO THE CLEAN OUT STACK WYE (EXCEPT AS NOTED)
5. ALL MAIN LINE TAPS ON ACTIVE MAINS SHALL BE SUPERVISED OR PERFORMED BY PSA.
6. PIPING BEHIND CLEANOUT TO BE INSTALLED PER APPLICABLE BUILDING CODE.
7. MINIMUM LATERAL SIZE:
   4' FOR RESIDENTIAL SERVICE
   6' FOR NON-RESIDENTIAL SERVICE
8. MINIMUM COVER FOR ALL SEWER LATERALS SHALL BE THREE (3') FEET.

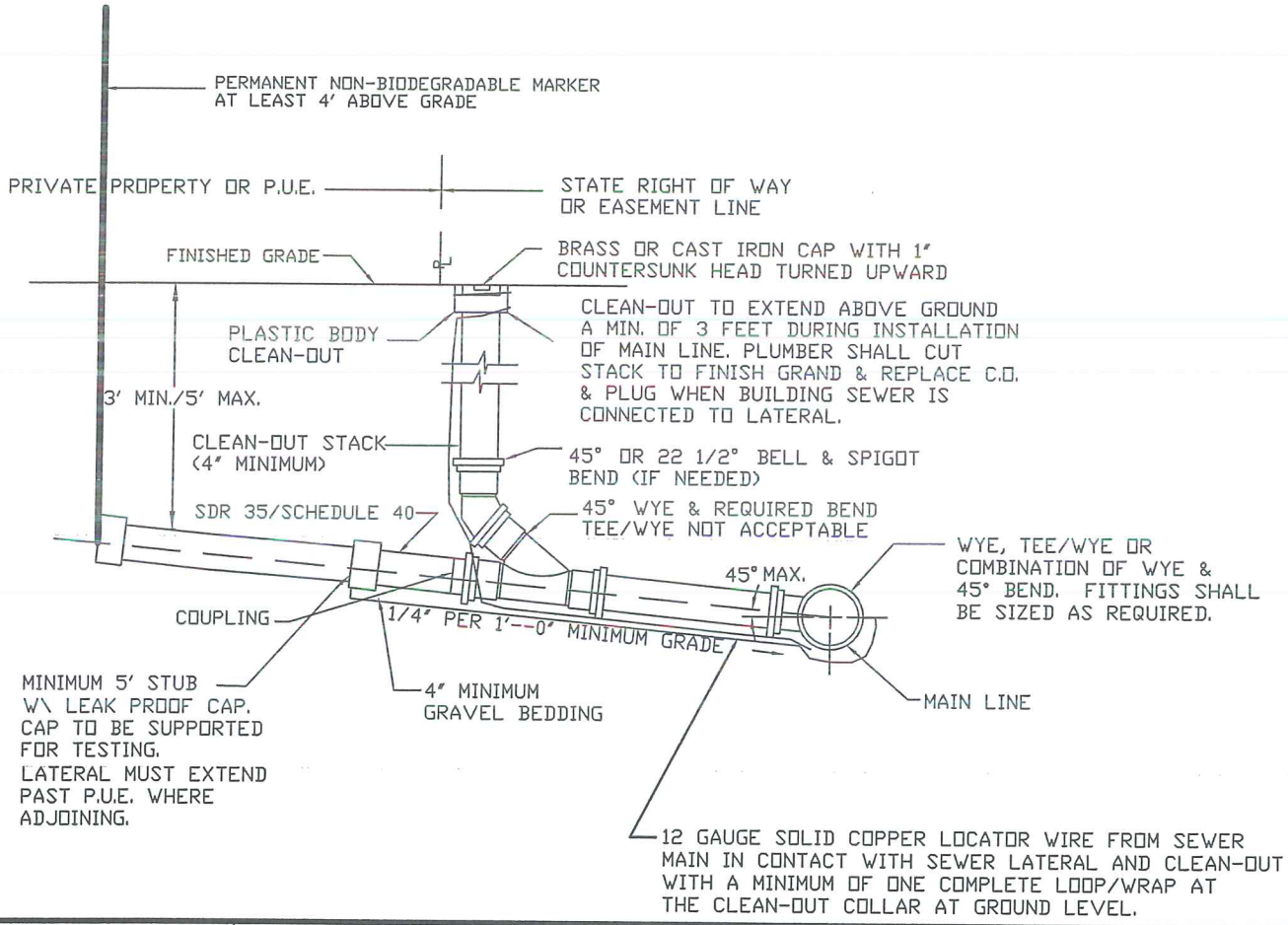

REVISIONS				SANITARY SEWER LATERAL (FOR SPECIAL CASES)	DRAWING S-09
NO.	DATE				
ORIGINAL	12/01/06				
1	9/01/07				
2	5/01/12				

GENERAL NOTES:

1. TRAFFIC BEARING BOX REQUIRED IN TRAFFIC AREAS.
2. ALL PIPE AND FITTINGS SHALL BE OF SIMILAR MATERIAL.
3. ALL PIPE SHALL BE OF SIZE SHOWN.
4. NO BENDS ARE ALLOWED IN THE LATERAL FROM THE MAIN TO THE CLEAN-OUT STACK WYE. (EXCEPT AS NOTED)
5. ALL MAIN LINE TAPS ON ACTIVE MAINS SHALL BE SUPERVISED OR PERFORMED BY PSA.
6. PIPING BEHIND CLEANOUT TO BE INSTALLED PER APPLICABLE BUILDING CODE.
7. MINIMUM COVER FOR ALL SEWER LATERALS SHALL BE THREE (3') FEET

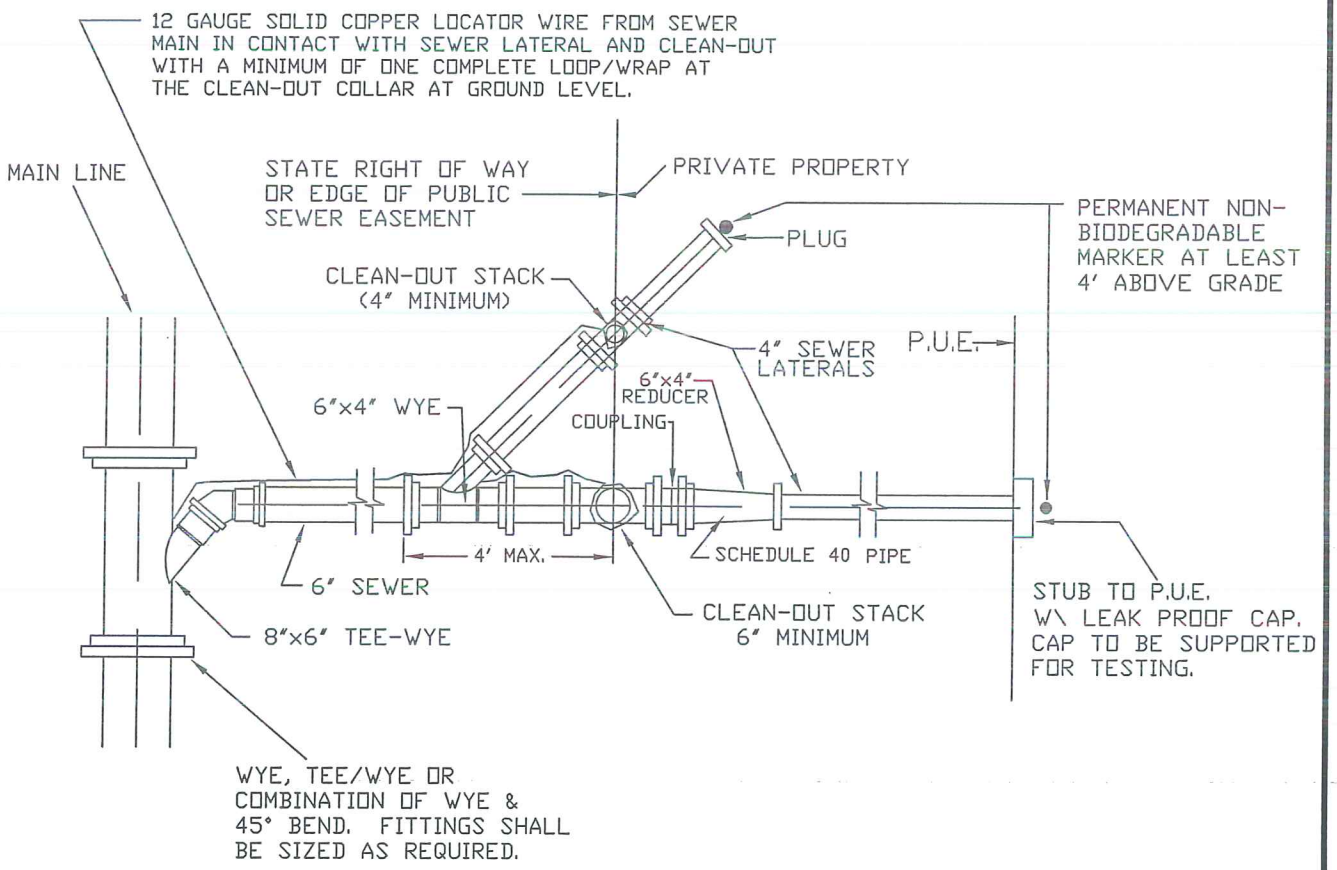

REVISIONS				COMBINED 6" BY TWO 4" LATERALS	DRAWING S-10
NO.	DATE				
ORIGINAL	12/01/06				
1	9/01/07				
2	5/01/12				

GENERAL NOTES:

1. TRAFFIC BEARING BOX REQUIRED IN TRAFFIC AREAS.
2. ALL PIPE AND FITTINGS SHALL BE OF SIMILAR MATERIAL.
3. ALL PIPE SHALL BE OF SAME SIZE.
4. NO BENDS ARE ALLOWED IN THE LATERAL FROM THE MAIN TO THE CLEAN-OUT STACK WYE. (EXCEPT AS NOTED)
5. ALL MAIN LINE TAPS ON ACTIVE MAINS SHALL BE SUPERVISED OR PERFORMED BY PSA.
6. MINIMUM COVER FOR ALL SEWER LATERALS SHALL BE THREE (3') FEET
7. GRAVITY SECTION AND CLEANOUT SHALL BE 6" DIA. FOR PUBLIC FORCE MAINS AND 4" DIA. FOR PRIVATE FORCE MAINS.
8. PUBLIC FORCE MAINS SHALL CONNECT TO SEWER MANHOLES.

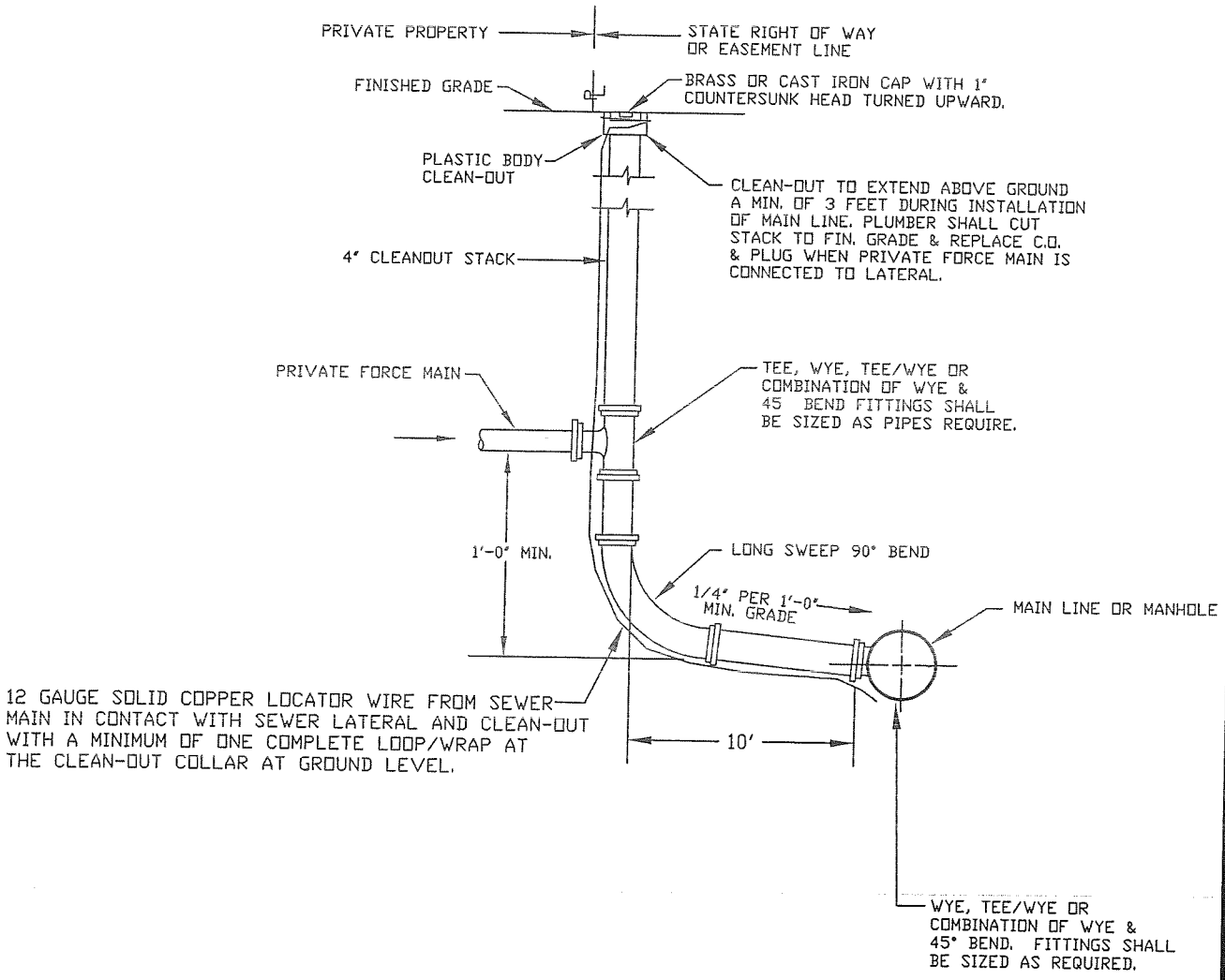

REVISIONS			
NO.	DATE		
ORIGINAL	12/01/06		
1	09/01/07		
2	07/25/12		

FORCE MAIN TO GRAVITY LATERAL CONNECTION

DRAWING S-11

NOTES:

1. ALL MANHOLE FRAMES AND COVERS SHALL BE EAST JORDAN MODELS 1045Z AND 1040AGS OR APPROVED EQUAL.
2. STEPS TO BE VERTICALLY ALIGNED.
3. THE FRAME AND COVER SHALL BE PROPERLY ALIGNED WITH THE 2 FOOT OPENING OF THE MANHOLE STRUCTURE AND BOLTED IN PLACE.
4. GROUT/CEMENT/CONCRETE/MORTAR SHALL NOT BE PLACED IN/ON ANY SECTION OF THE MANHOLE IN THE FIELD.

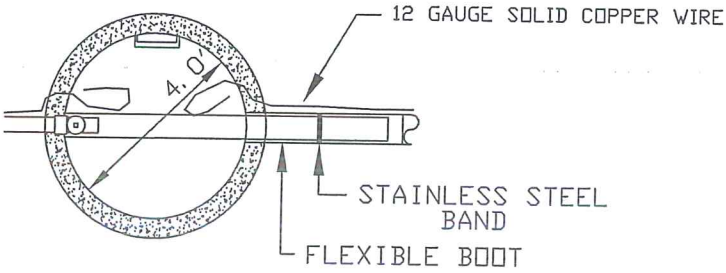

SECTION A-A

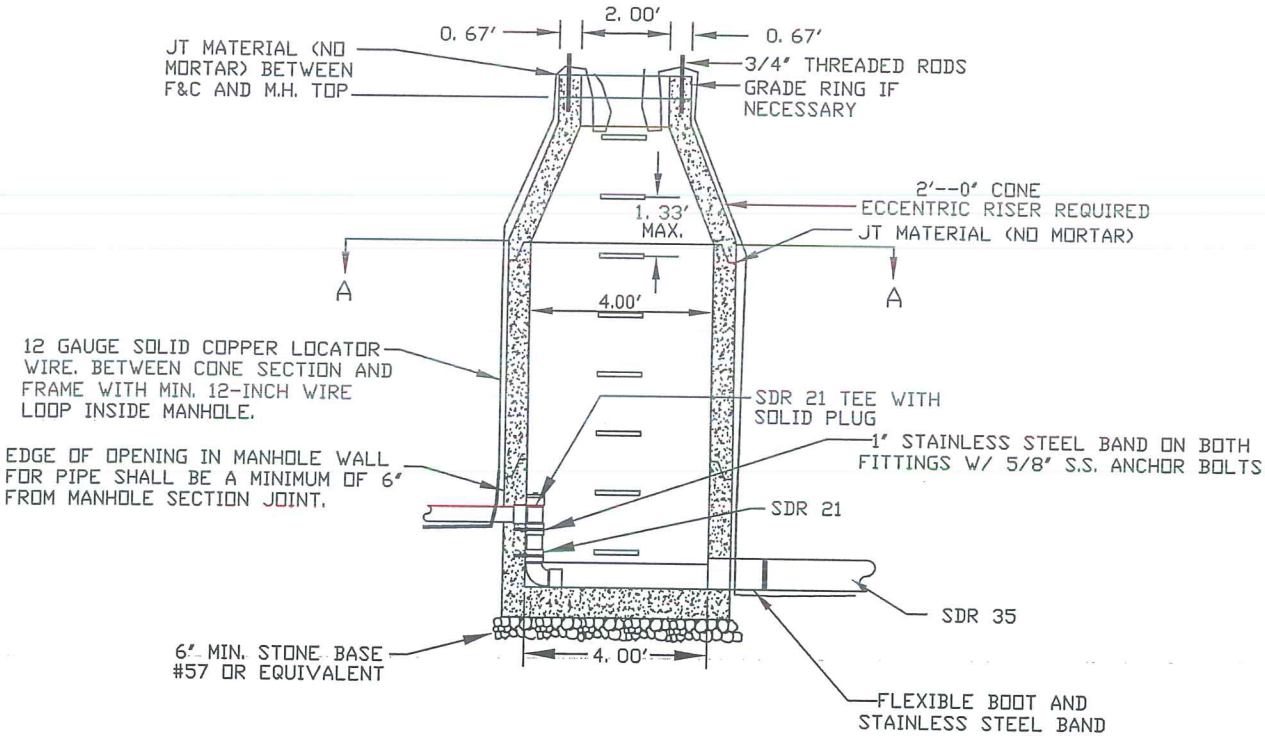

REVISIONS				PUBLIC FORCE MAIN CONNECTION TO MANHOLE	DRAWING S-12
NO.	DATE				
ORIGINAL	9/01/07				
1	5/01/12				

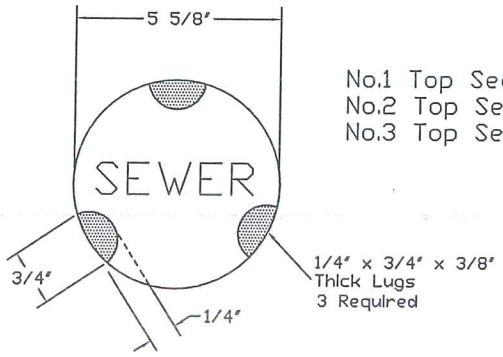

Lug Details

No.1 Top Section X - 6"
No.2 Top Section X - 9"
No.3 Top Section X - 12"

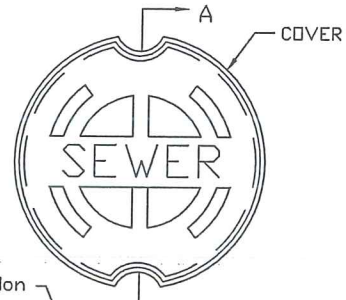

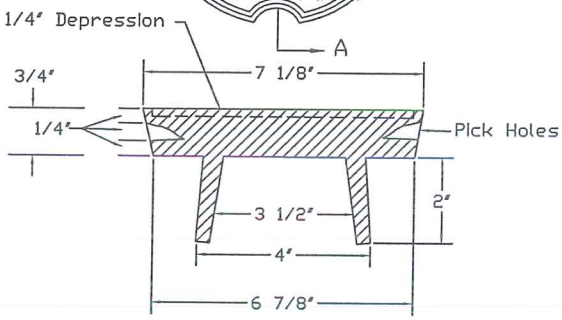

Section AA

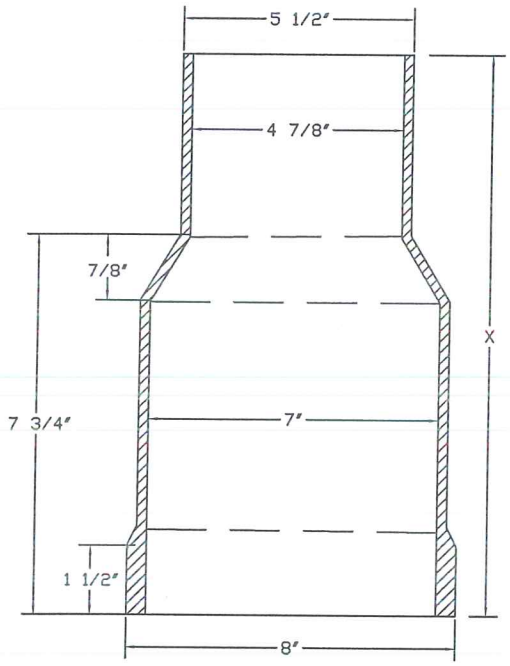

Bottom Section

No.1 Bottom Section X - 12 1/2"
No.2 Bottom Section X - 16 1/2"
No.3 Bottom Section X - 20 1/2"
No.4 Bottom Section X - 26 1/2"

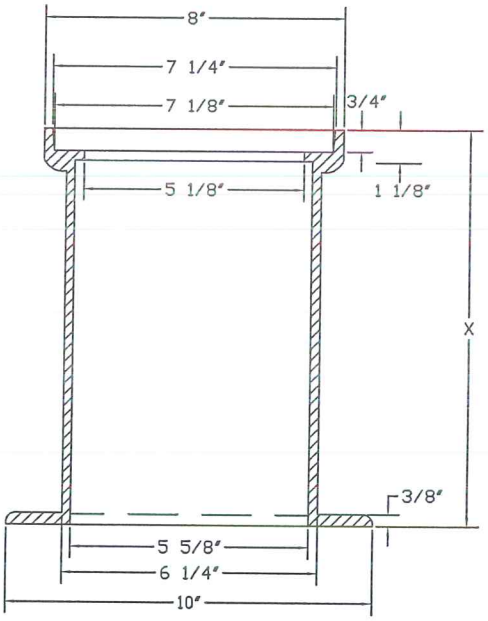

Top Section

NOTE: A MINIMUM CLEARANCE OF 4 INCHES IS REQUIRED BETWEEN CLEANOUT CAP AND TOP OF COVER.

REVISIONS			
NO.	DATE		
ORIGINAL	12/01/06		

TRAFFIC BEARING CLEANOUT BOX

DRAWING S-13

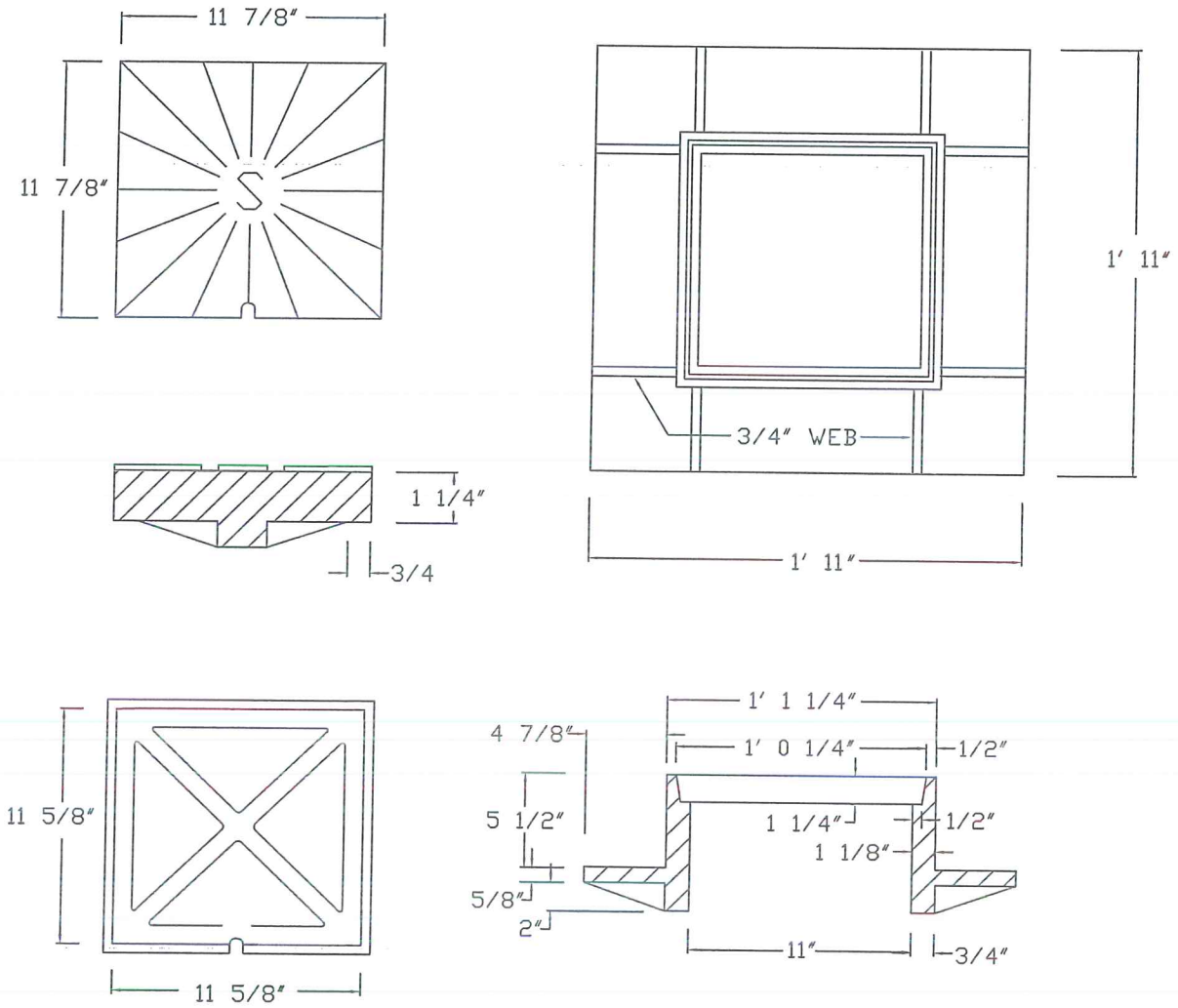

NOTE: A MINIMUM CLEARANCE OF 4 INCHES IS REQUIRED BETWEEN CLEANOUT CAP AND TOP OF COVER.

REVISIONS			
NO.	DATE		
ORIGINAL	12/01/06		

ALTERNATE TRAFFIC BEARING CLEANOUT BOX

RICHARD FOUNDRY CO.
DESIGN NO. L-1020
OR EQUIVALENT

DRAWING
S-14

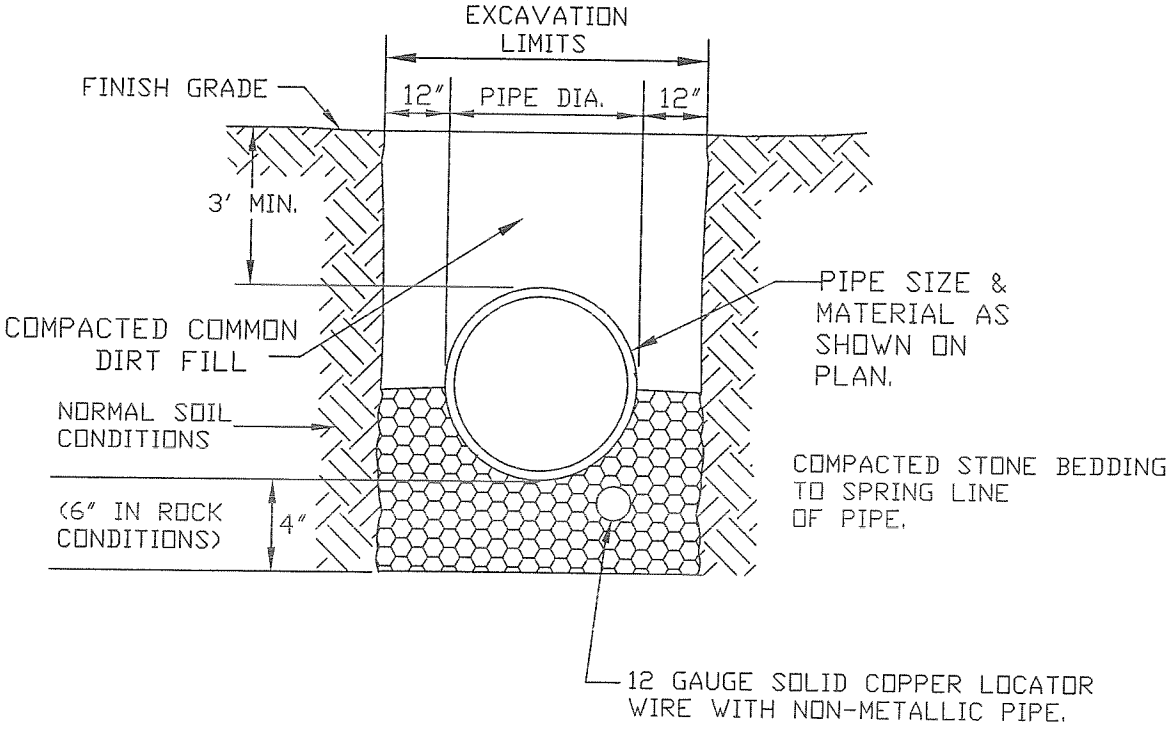

REVISIONS			
NO.	DATE		
ORIGINAL	12/01/06		
1	07/25/12		

STONE BEDDING

DRAWING
S-15

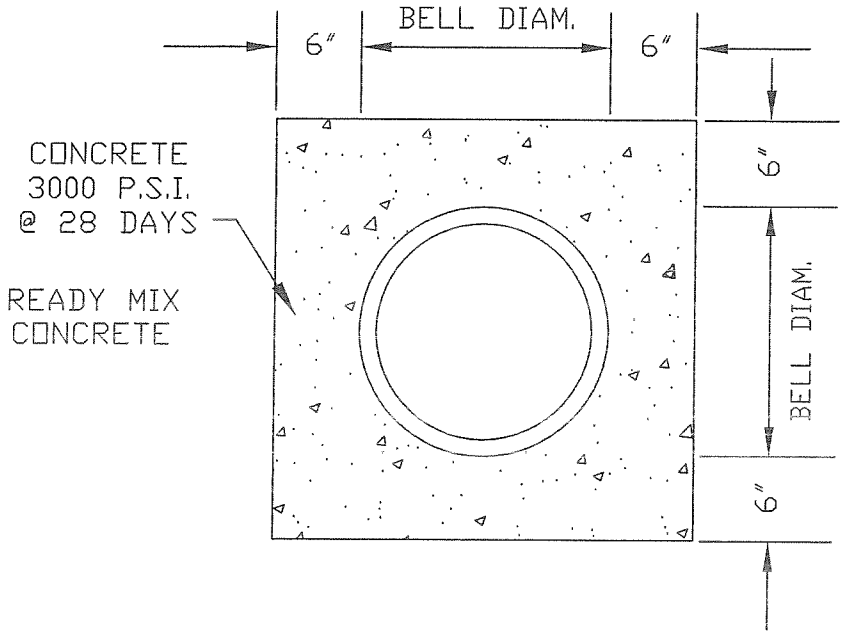

REVISIONS			
NO.	DATE		
ORIGINAL	12/01/06		

CONCRETE ENCASED PIPE

DRAWING S-16

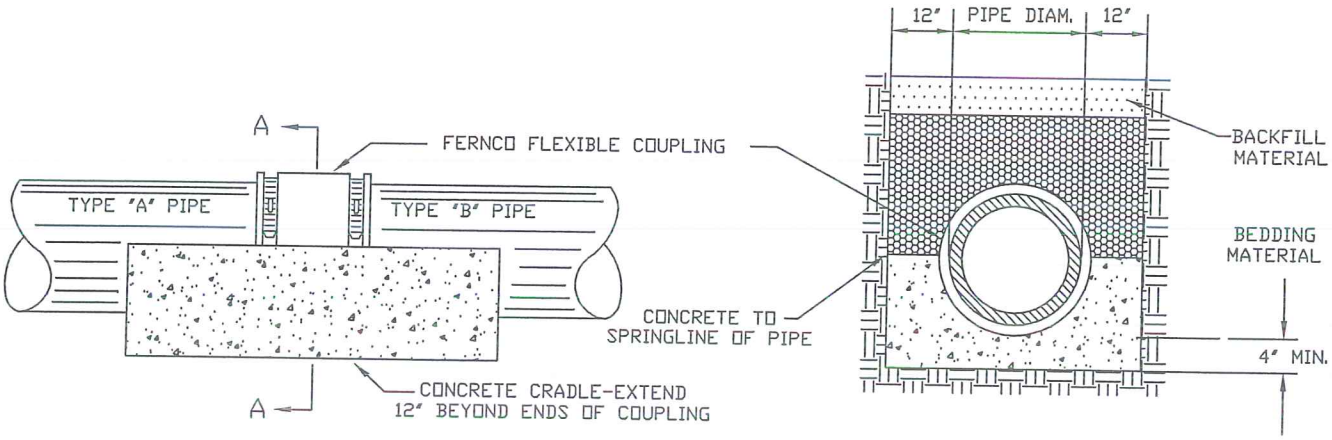

REVISIONS			
NO.	DATE		
ORIGINAL	12/01/06		

JOINING DISSIMILAR PIPE FOR USE WITH EXISTING PIPE

DRAWING S-17

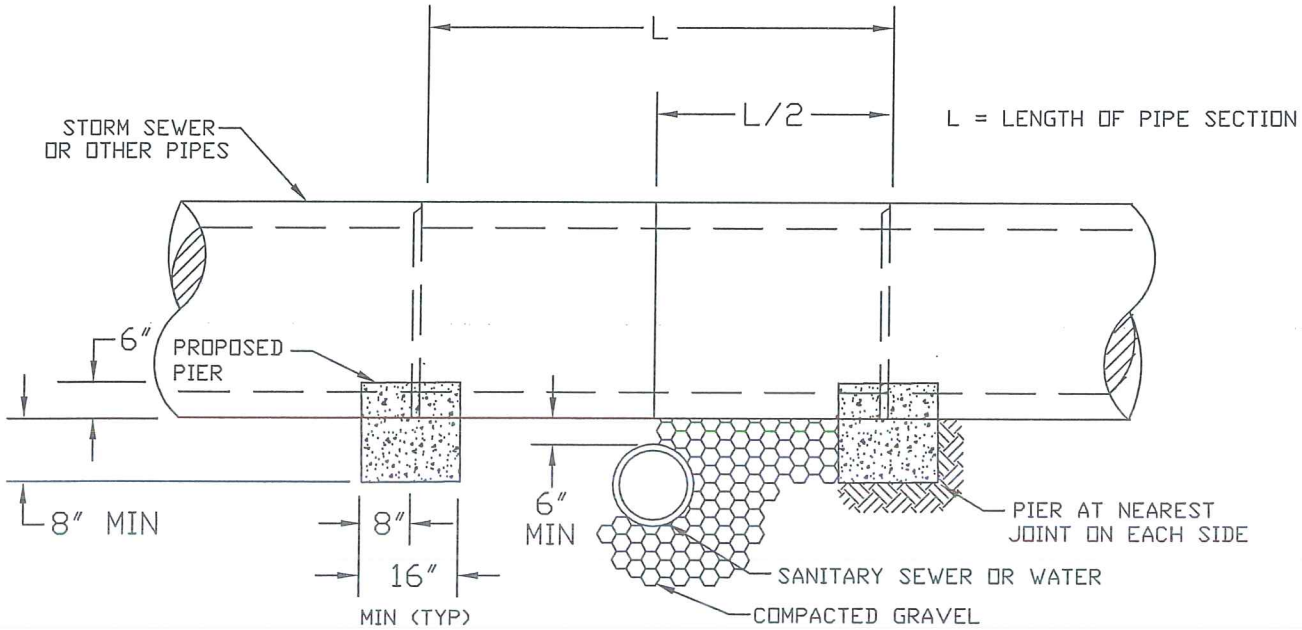

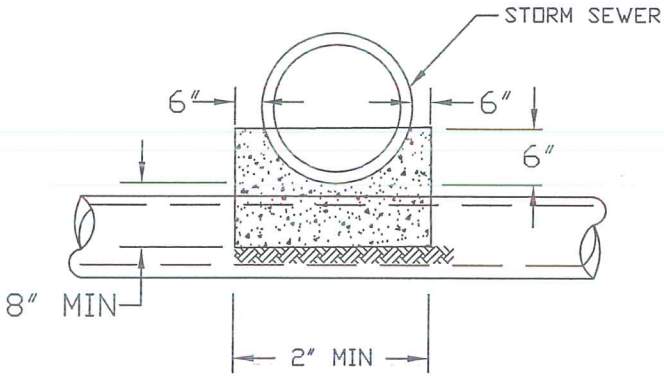

NOTE:

1. PIER REQUIRED WHEN STORM DRAIN OR OTHER PIPES CROSSES OVER THE OTHER UTILITY WITH A VERTICAL CLEARANCE OF LESS THAN 18".
2. PIER TO BE BUILT ON UNDISTURBED EARTH.
3. CONCRETE TO BE READY MIX, CLASS A3.

REVISIONS				CONCRETE PIER	DRAWING S-18
NO.	DATE				
ORIGINAL	12/01/06				

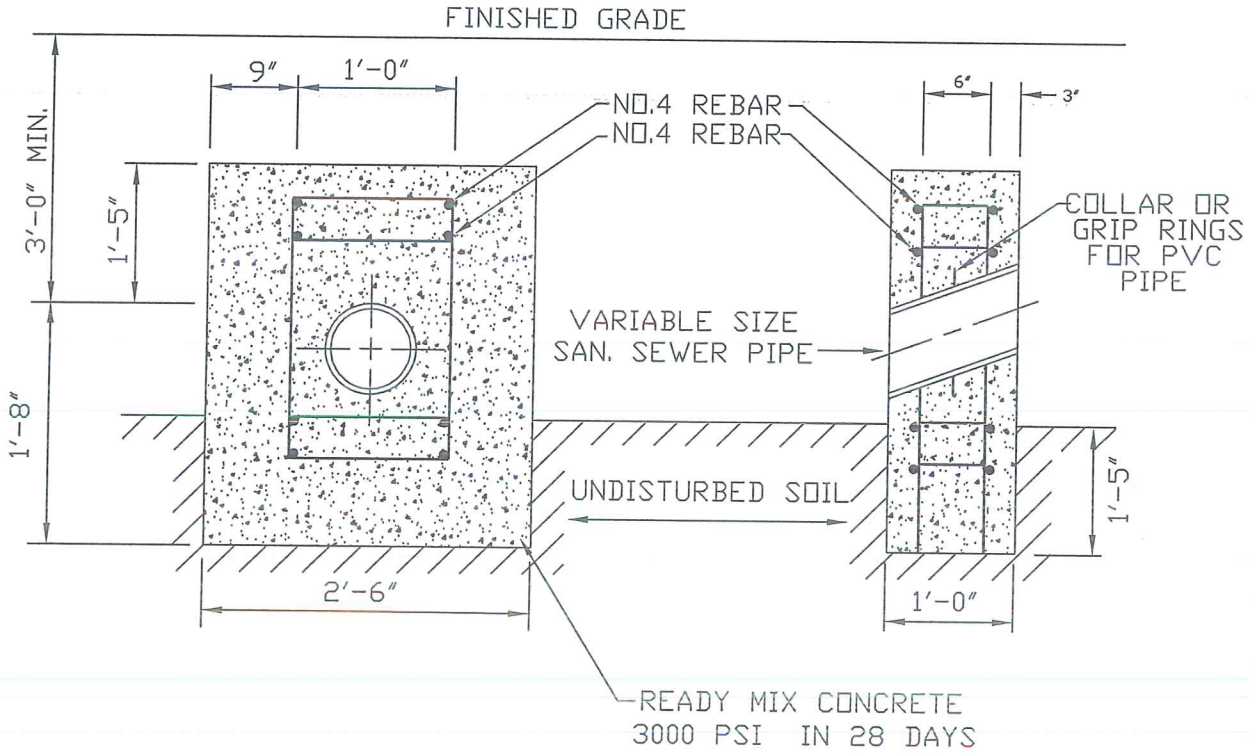

GRADES 20% TO 35% -- 36 FT ON CENTER
* GRADES 35% TO 50% -- 24 FT ON CENTER
* GRADES 50% TO 60% -- 16 FT ON CENTER

* WITH WRITTEN APPROVAL OF PSA DIRECTOR

REVISIONS			
NO.	DATE		
ORIGINAL	12/01/06		

ANCHOR BLOCK

DRAWING
S-19

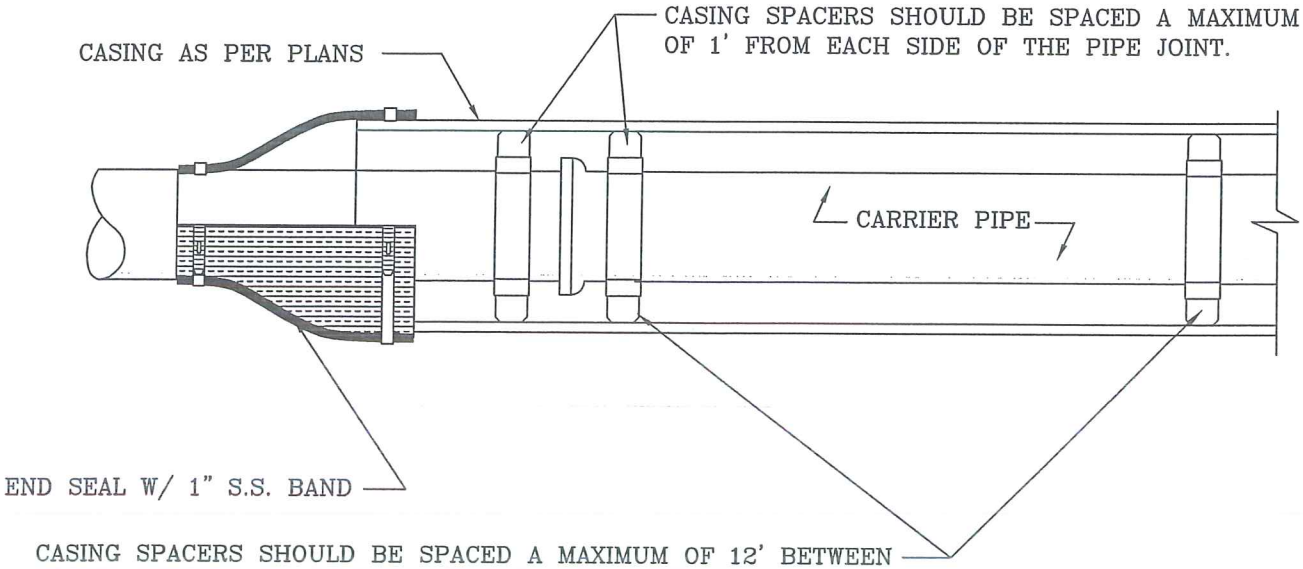

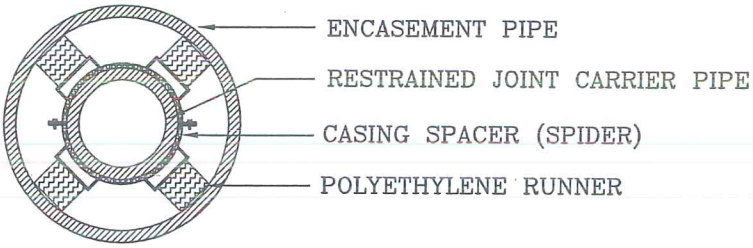

ALTERNATE PIPE SUPPORT IN CASING PIPE:

18" LONG TREATED TIMBER SKIDS OF APPROPRIATE WIDTH SO THAT BELLS OR FLANGES DO NOT REST ON CASING WITH MORE THAN 3/4" FREE PLAY. SKIDS TO BE PLACED AT 4'-0" O.C. AND SECURED WITH 2"x 1/4" GALV. STEEL STRAPS OR 1" S.S. BANDS. SOAP-BASED LUBRICANT MAY BE USED FOR SLIDING OF SKID WITH DUCTILE IRON PIPE AND FLAX-BASED LUBRICANT MAY BE USED FOR SLIDING OF SKID WITH PVC PIPE.

NOTE: A 1" DRAIN WILL BE REQUIRED ON THE LOWER END OF THE CASING IF THE CASING ENDS ARE SEALED WITH MORTAR AND BRICK.

REVISIONS				PIPE SUPPORT IN CASING PIPE	DRAWING S-20
NO.	DATE				
ORIGINAL	12/01/06				

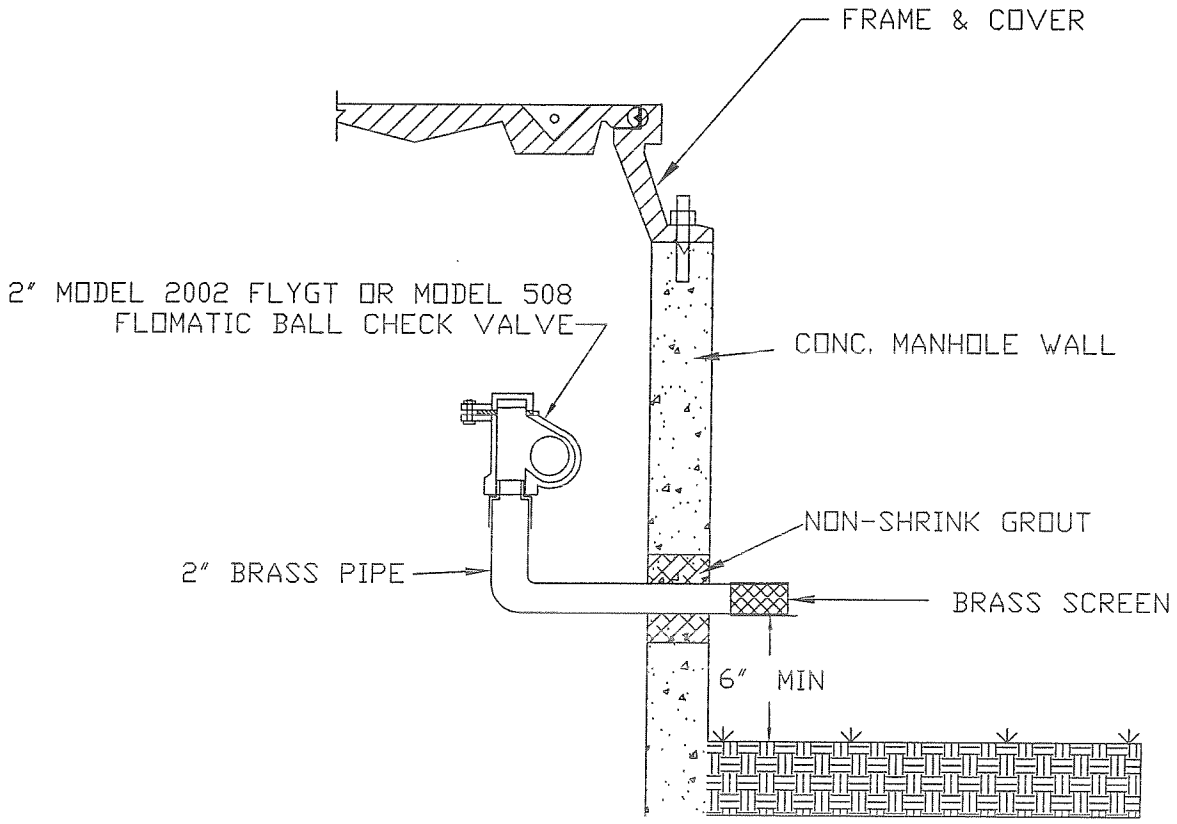

REVISIONS			
NO.	DATE		
ORIGINAL	12/01/06		
1	5/01/12		

TYPE 1
MANHOLE VENT
OUT OF RIGHT OF WAY

DRAWING
S-21

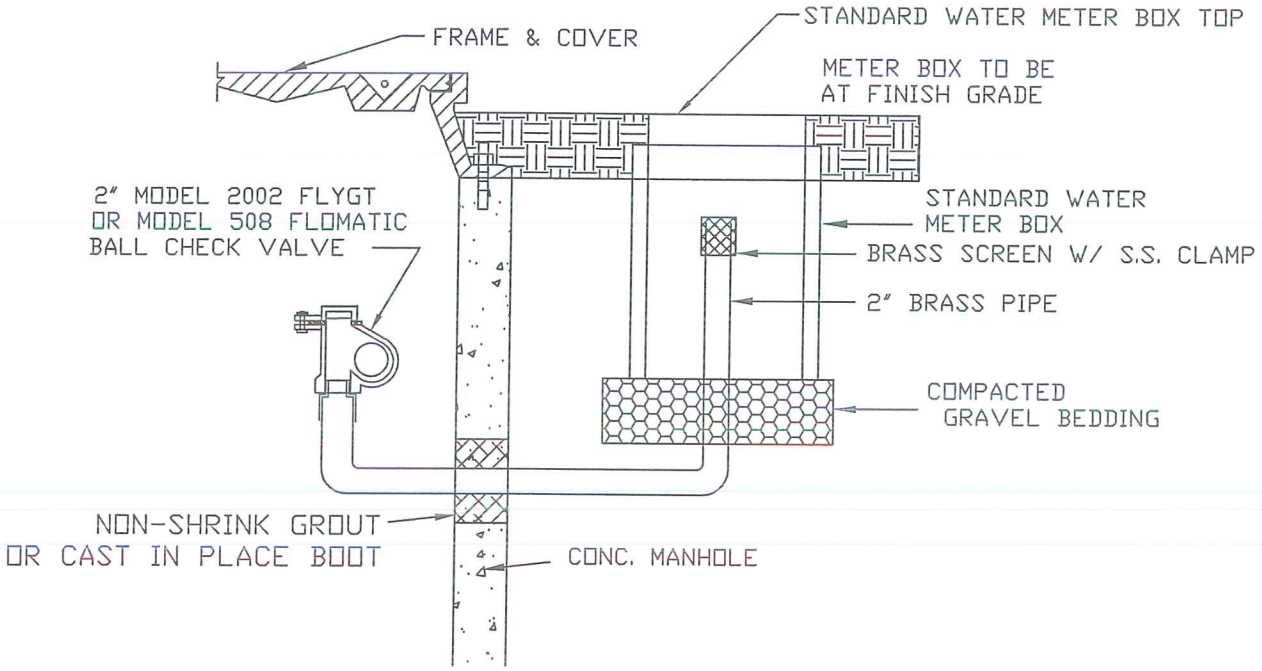

REVISIONS			
NO.	DATE		
ORIGINAL	12/01/06		
1	5/01/12		

TYPE 2
MANHOLE VENT

DRAWING
S-22

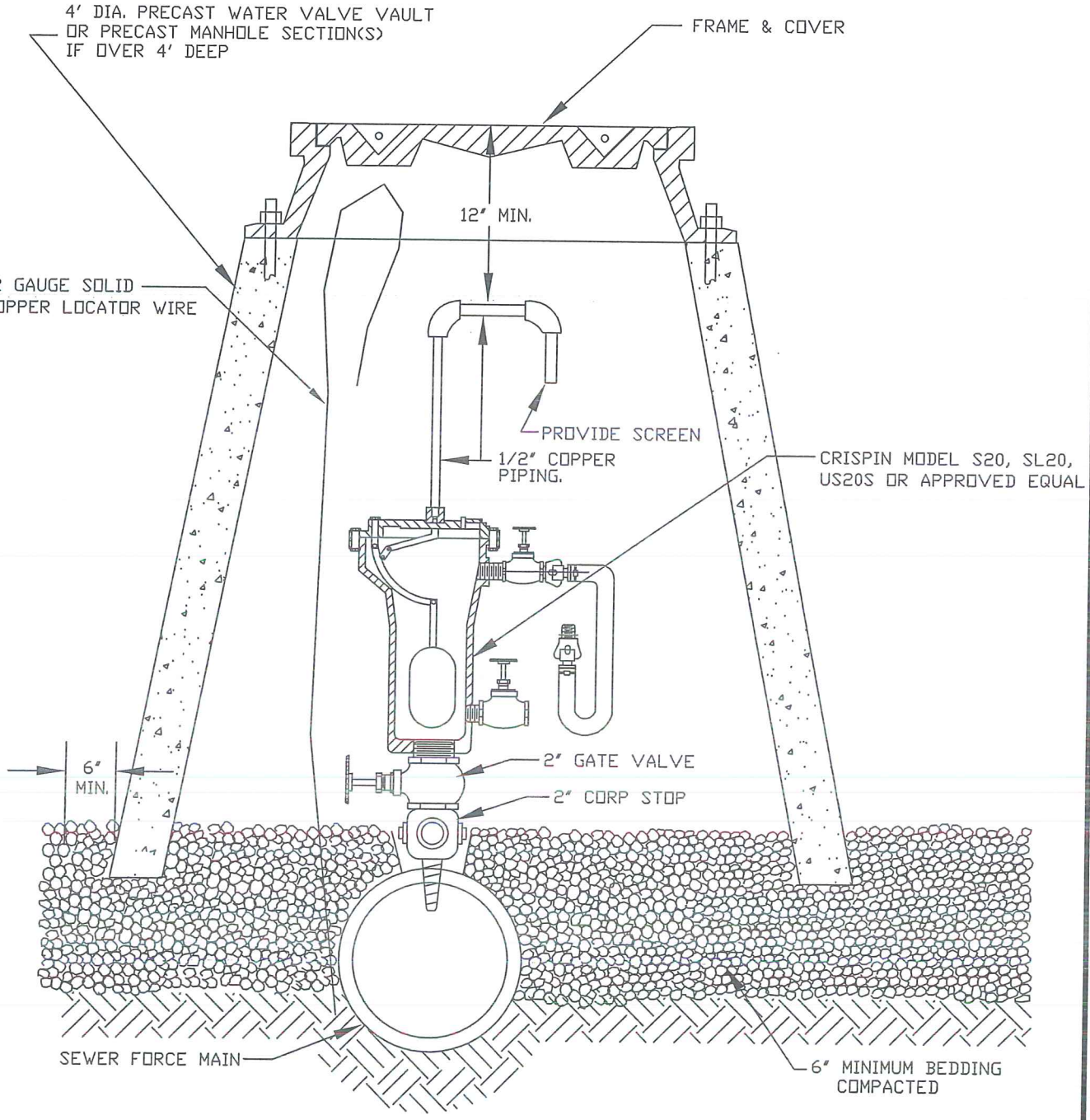

SADDLES MUST BE USED WITH ALL PLASTIC & CLASS 51 DUCTILE IRON PIPE 4" AND LARGER IN DIAMETER. TEES WITH THE BRANCH LEG OF 2" SHALL BE USED FOR ALL FORCE MAINS LESS THAN 4" IN DIAMETER. A 2" DIAMETER PORT SHALL BE PROVIDED FROM THE FORCE MAIN TO AIR RELEASE VALVE.

REVISIONS				UNIVERSAL, COMBINATION, OR AIR RELEASE ASSEMBLY FOR USE ON SEWER FORCE MAIN	DRAWING S-23
NO.	DATE				
ORIGINAL	12/01/06				
1	9/01/07				
2	5/01/12				

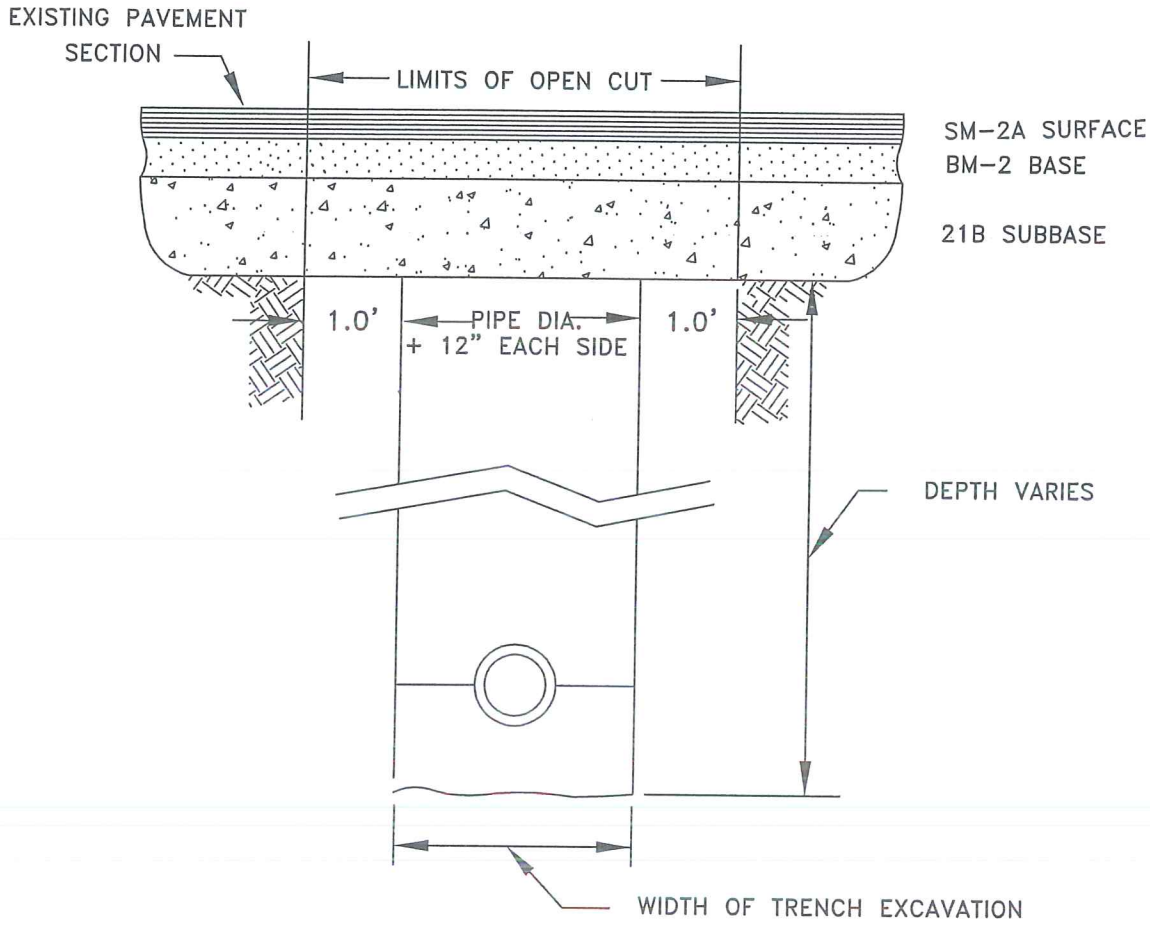

A. THE CONTRACTOR SHALL REPLACE THE OPEN CUT WITH A MINIMUM TOP COURSE, 2" VDOT SM-2A, BASE COURSE, 3" VDOT BM-2, AND SUBBASE, 8" VDOT 21B, OR AS REQUIRED BY VDOT.

B. ALL CONSTRUCTION WITHIN THE PUBLIC RIGHT-OF-WAY SHALL BE AS SPECIFIED BY VDOT.

C. ALL EXPOSED EDGES OF EXISTING BITUMINOUS SURFACE COURSE SHALL BE PRIMED WITH A MATERIAL SATISFACTORY TO THE DIRECTOR BEFORE THE BITUMINOUS MIXTURES ARE REPLACED. EDGES OF TRENCH SHALL BE CUT TO A STRAIGHT LINE PRIOR TO PAVING.

D. THE BACKFILL IN THE TRENCH SHALL BE SUITABLE AND THOROUGHLY COMPACTED IN 6-INCH LAYERS BY TAMPING OR BY OTHER APPROVED METHOD BEFORE THE OPENING IS PAVED. NO EXCAVATIONS UNDER THE EXISTING PAVEMENT WILL BE PERMITTED. SHEETING OR SHORING SHALL BE USED WHEN REQUIRED BY THE DEPTH OF THE TRENCH OR TYPE OF MATERIAL IN ACCORDANCE WITH VIRGINIA O.S.H.A. STANDARDS.

REVISIONS			
NO.	DATE		
ORIGINAL	12/01/06		

PAVEMENT REPLACEMENT OPEN CUT ROADWAY

DRAWING S-24

MONTGOMERY COUNTY PUBLIC SERVICE AUTHORITY
CHRISTIANSBURG, VIRGINIA

CONSTRUCTION STANDARDS

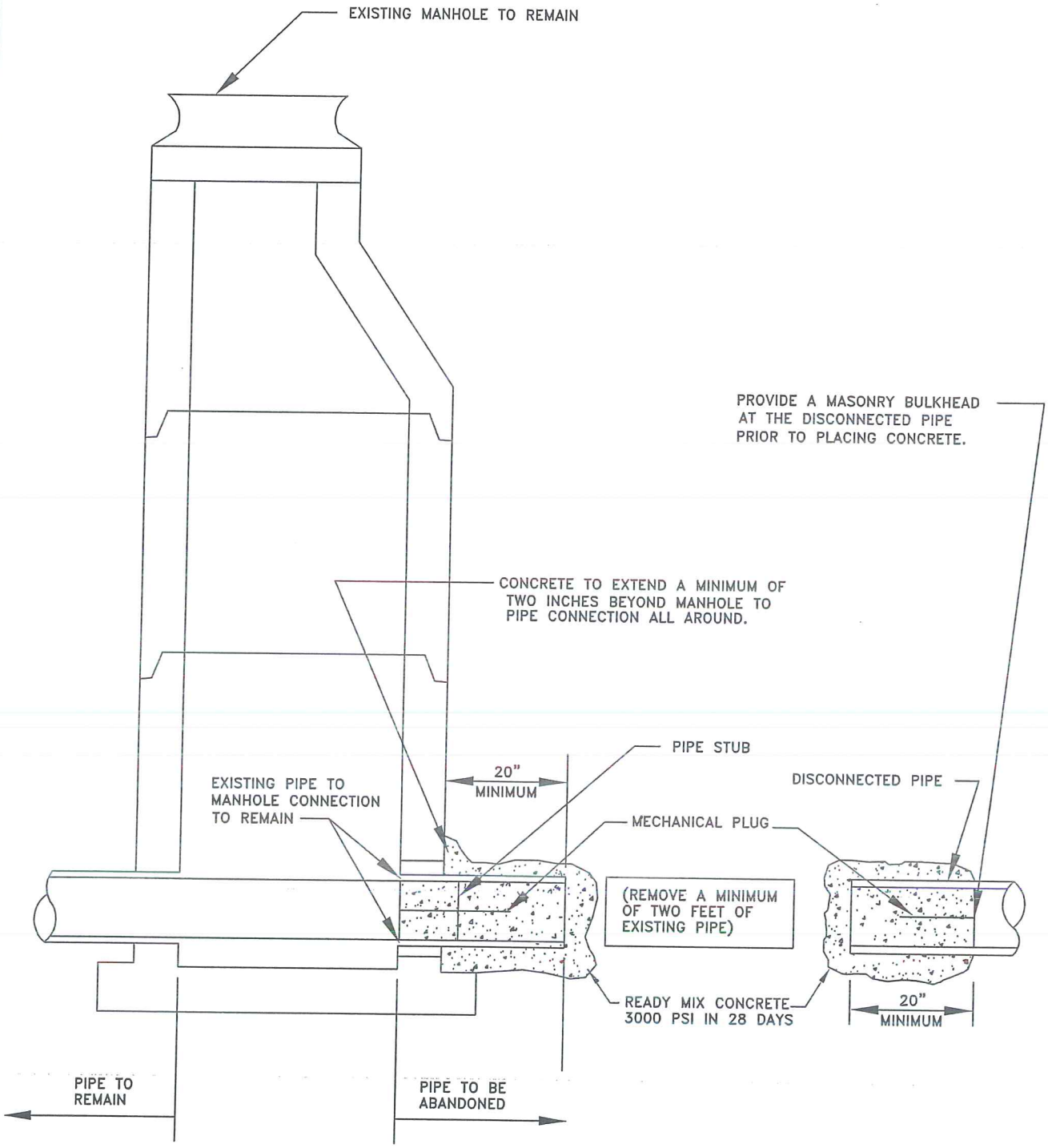

REVISIONS			
NO.	DATE		
ORIGINAL	12/01/06		

SANITARY SEWER PIPE ABANDONMENT AT A MANHOLE

DRAWING S-25

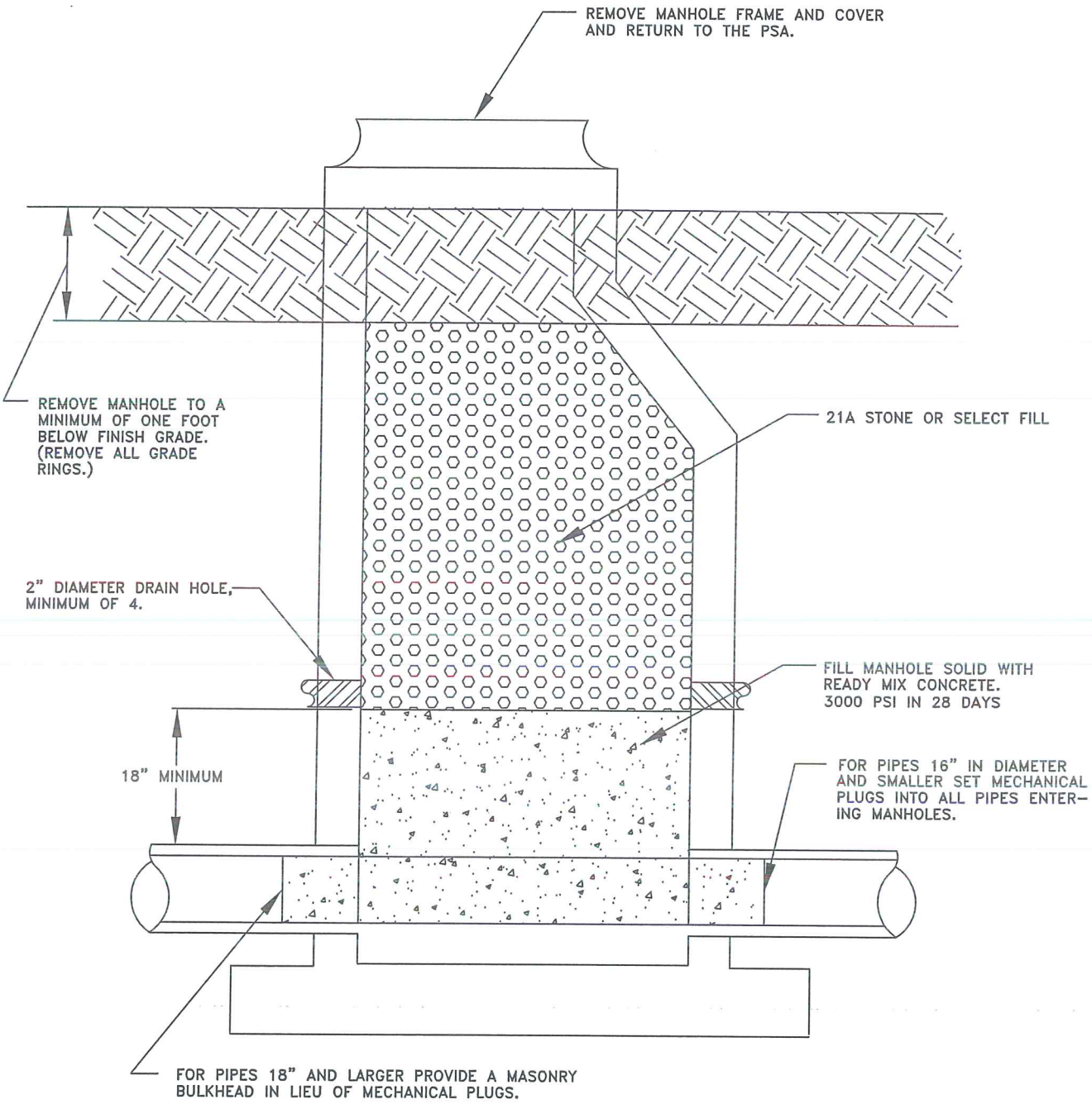

REVISIONS			
NO.	DATE		
ORIGINAL	12/01/06		
1	9/01/07		

SANITARY SEWER MANHOLE ABANDONMENT

DRAWING S-26

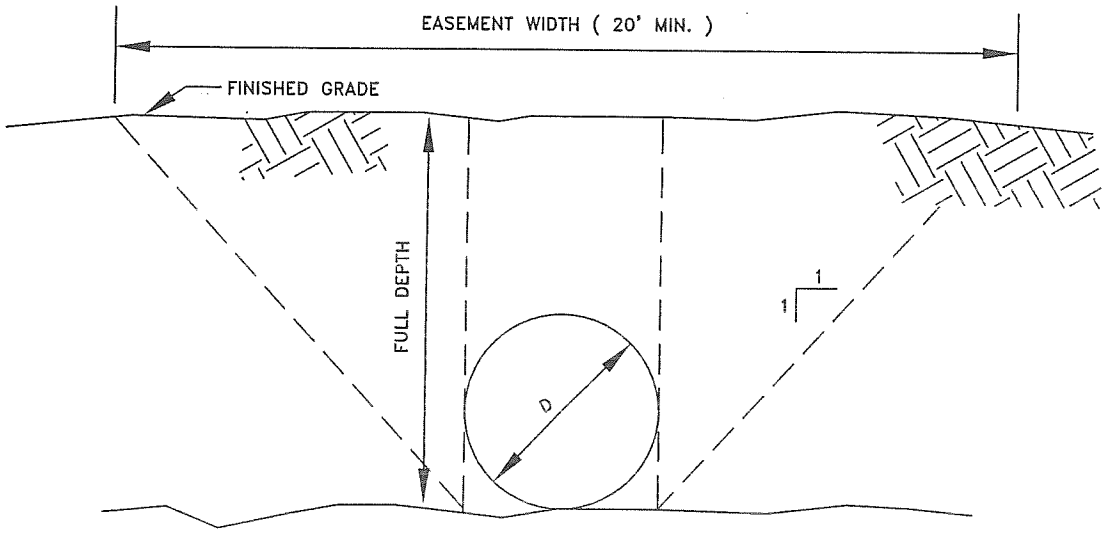

D = PIPE DIAMETER.

A. PUBLIC EASEMENT WIDTH SHALL BE DETERMINED BASED ON 1:1 SIDE SLOPE EXTENDING FROM THE FINISHED GRADE TO OUTSIDE EDGE OF PIPE (NOMINAL PIPE DIAMETER) ROUNDED UP TO THE NEAREST 1' INCREMENT.

B. THIS EASEMENT SHALL EXTEND ALONG THE ENTIRE LENGTH OF THE SUBJECT PIPE AT LEAST ONE HALF THE DISTANCE OF EASEMENT PAST CENTER OF LAST MANHOLE.

C. MIN. 20' UNLESS APPROVED BY PSA DIRECTOR.

REVISIONS			
NO.	DATE		
ORIGINAL	12/01/06		

SANITARY SEWER EASEMENTS

DRAWING S-27

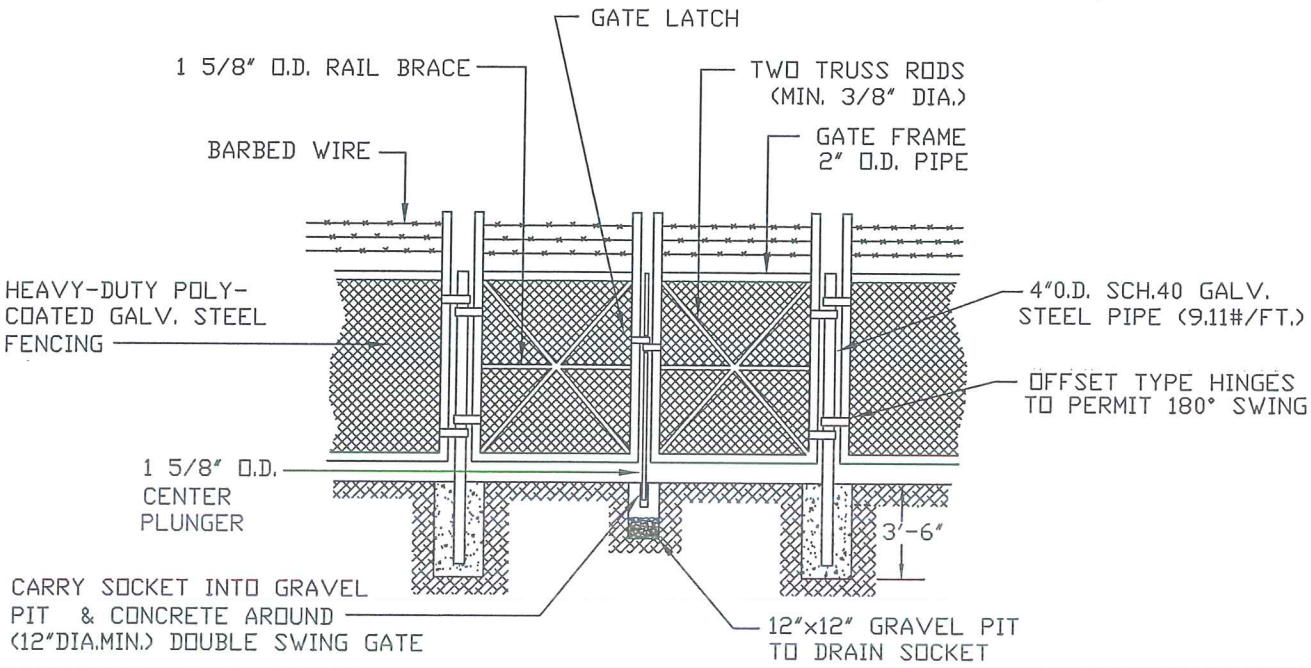

DOUBLE GATE DETAIL

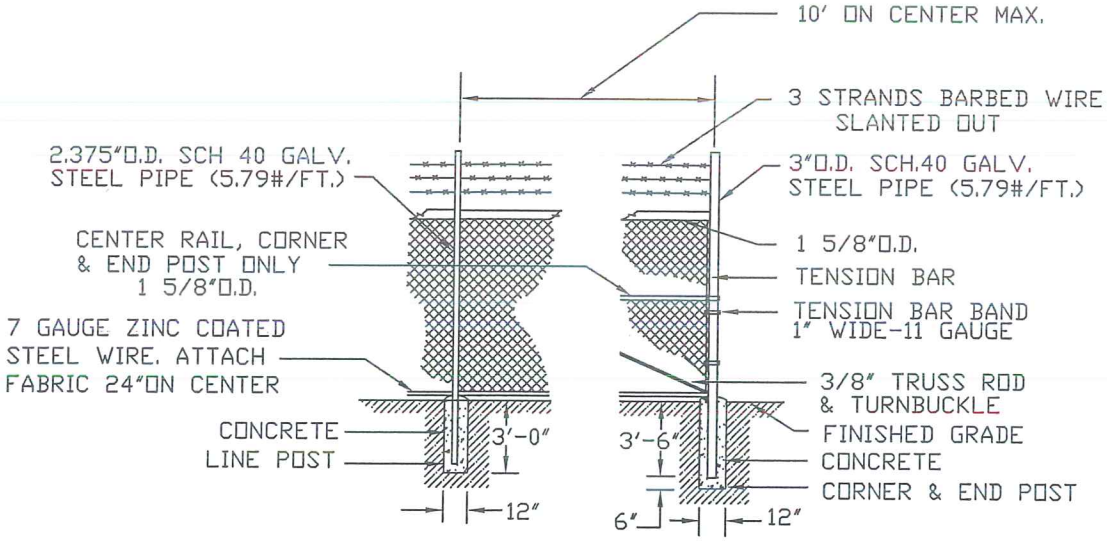

FENCE DETAIL

AS DESIGNATED BY DIRECTOR FOR SECURITY OF UTILITY INSTALLATIONS

REVISIONS			
NO.	DATE		
ORIGINAL	12/01/06		
1	5/01/12		

CHAIN LINK FENCE

DRAWING S-28

EQUIVALENT PSI	HEIGHT OF GROUND WATER ABOVE PIPE INV. (Ft.)
0.43	1
0.87	2
1.30	3
1.73	4
2.17	5
2.60	6
3.03	7
3.47	8
3.90	9
4.34	10
4.77	11
4.98	11.5
For anything above 11.5 VF, allow maximum 5.0 PSI.	

NOTES:

1. Table based on 1.0 v.f. of water = 0.4335 PSI.
2. The appropriate PSI allowance for average vertical foot of ground water shall be added to the base starting pressure of 4.0 PSI, but in no CASE shall the resulting pressure be more than 9.0 PSI.
3. Interpolate for fractions of a foot of water.

REVISIONS			
NO.	DATE		
ORIGINAL	12/01/06		

AIR TESTING
BACK PRESSUIRE
EQUIVALENCY
TABLE

DRAWING
S-29

MONTGOMERY COUNTY PUBLIC SERVICE AUTHORITY
CHRISTIANSBURG, VIRGINIA

CONSTRUCTION STANDARDS

Pipe Diameter (in.)	Min. Time (min: sec)	Length for Min. Time (ft)	Time for Longer Length (sec)	Specified Time for Length (L) Shown (min:sec)							
				100 ft	150 ft	200 ft	250 ft	300 ft	350 ft	400 ft	450 ft
4	3:46	597	.380 L	3:46	3:46	3:46	3:46	3:46	3:46	3:46	3:46
6	5:40	398	.854 L	5:40	5:40	5:40	5:40	5:40	5:40	5:42	6:24
8	7:34	298	1.520 L	7:34	7:34	7:34	7:34	7:36	8:52	10:08	11:24
10	9:26	239	2.374 L	9:26	9:26	9:26	9:53	11:52	13:51	15:49	17:48
12	11:20	199	3.418 L	11:20	11:20	11:24	14:15	17:05	19:56	22:47	25:38
15	14:10	159	5.342 L	14:10	14:10	17:48	22:15	26:42	31:09	35:36	40:04
18	17:00	133	7.692 L	17:00	19:13	25:38	32:03	38:27	44:52	51:16	57:41
21	19:50	114	10.470 L	19:50	26:10	34:54	43:37	52:21	61:00	69:48	78:31
24	22:40	99	13.674 L	22:47	34:11	45:34	56:58	68:22	79:46	91:10	102:33
27	25:30	88	17.306 L	28:51	43:16	57:41	72:07	86:32	100:57	115:22	129:48
30	28:20	80	21.366 L	35:37	53:25	71:13	89:02	106:50	124:38	142:26	160:15
33	31:10	72	25.852 L	43:05	64:38	86:10	107:43	129:16	150:43	172:21	193:53
36	34:00	66	30.768 L	51:17	76:55	102:34	128:12	153:50	179:29	205:07	230:46

REVISIONS

NO.	DATE
ORIGINAL	12/01/06

MINIMUM SPECIFIED TIME REQUIRED FOR A 1.0 PSIG PRESSURE DROP FOR SIZE AND LENGTH OF PIPE INDICATED FOR Q = 0.0015

DRAWING S-30

Pipe Diameter (in.)	Min. Time (min:sec)	Length for Min. Time (ft)	Time for Longer Length (sec)	Specified Time for Length (L) Shown (min:sec)								
				100 ft	150 ft	200 ft	250 ft	300 ft	350 ft	400 ft	450 ft
18	8:30	133	3.846 L	8:30	9:37	12:49	16:01	19:14	22:26	25:38	28:51
21	9:55	114	5.235 L	9:55	13:05	17:27	21:49	26:11	30:32	34:54	39:16
24	11:20	99	6.837 L	11:24	17:57	22:48	28:30	34:11	39:53	45:35	51:17
27	12:45	88	8.653 L	14:25	21:38	28:51	36:04	43:16	50:30	57:52	64:54
30	14:10	80	10.683 L	17:48	26:43	35:37	44:31	53:25	62:19	71:13	80:07
33	15:35	72	12.926 L	21:33	32:19	43:56	53:25	64:38	75:24	86:10	96:57
36	17:00	66	15.384 L	25:39	38:28	51:17	64:06	76:55	89:44	102:34	115:23

REVISIONS			
NO.	DATE		
ORIGINAL	12/01/06		

MINIMUM SPECIFIED TIME REQUIRED FOR A 0.5 PSIG PRESSURE DROP FOR SIZE AND LENGTH OF PIPE INDICATED FOR Q = 0.0015

DRAWING S-31

MONTGOMERY COUNTY PUBLIC SERVICE AUTHORITY
CHRISTIANSBURG, VIRGINIA

CONSTRUCTION STANDARDS