MONTGOMERY COUNTY PUBLIC SERVICE AUTHORITY
CHRISTIANSBURG, VIRGINIA

CONSTRUCTION STANDARDS

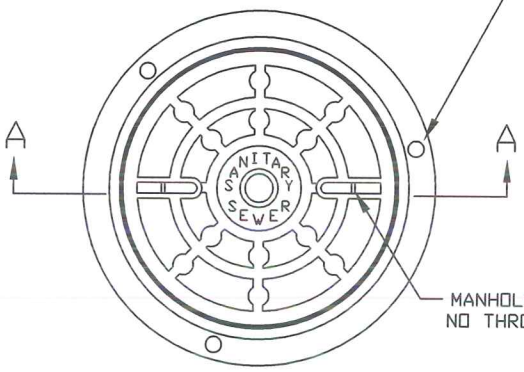

PLAN

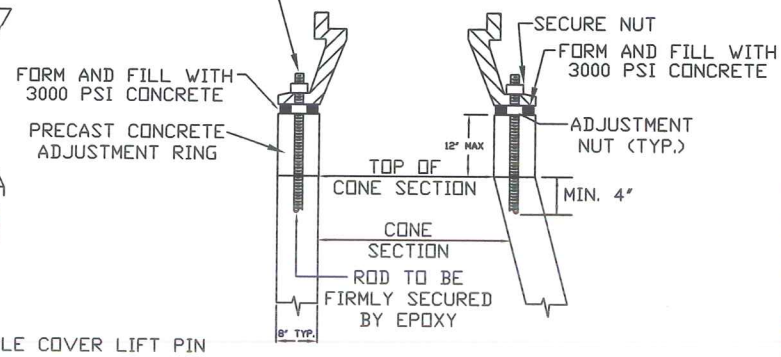

NOTE:

APPROVED WATER SEALANT REQUIRED AT ALL JOINTS.

INSTALLATION DETAIL
FOR ALL FRAMES AND COVERS

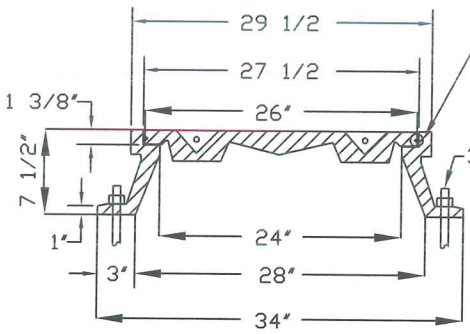

SECTION A-A

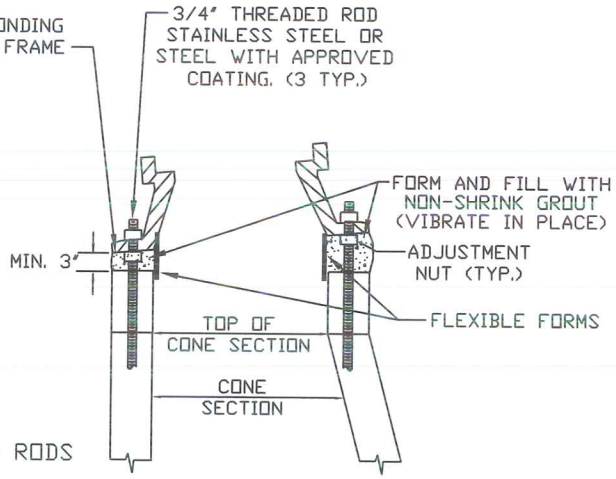

INSTALLATION DETAIL
FOR SLOPE ADJUSTMENT

REVISIONS			
NO.	DATE		
ORIGINAL	09/30/06		

WATERTIGHT MANHOLE
MANHOLE FRAME & COVER

DRAWING
S-05