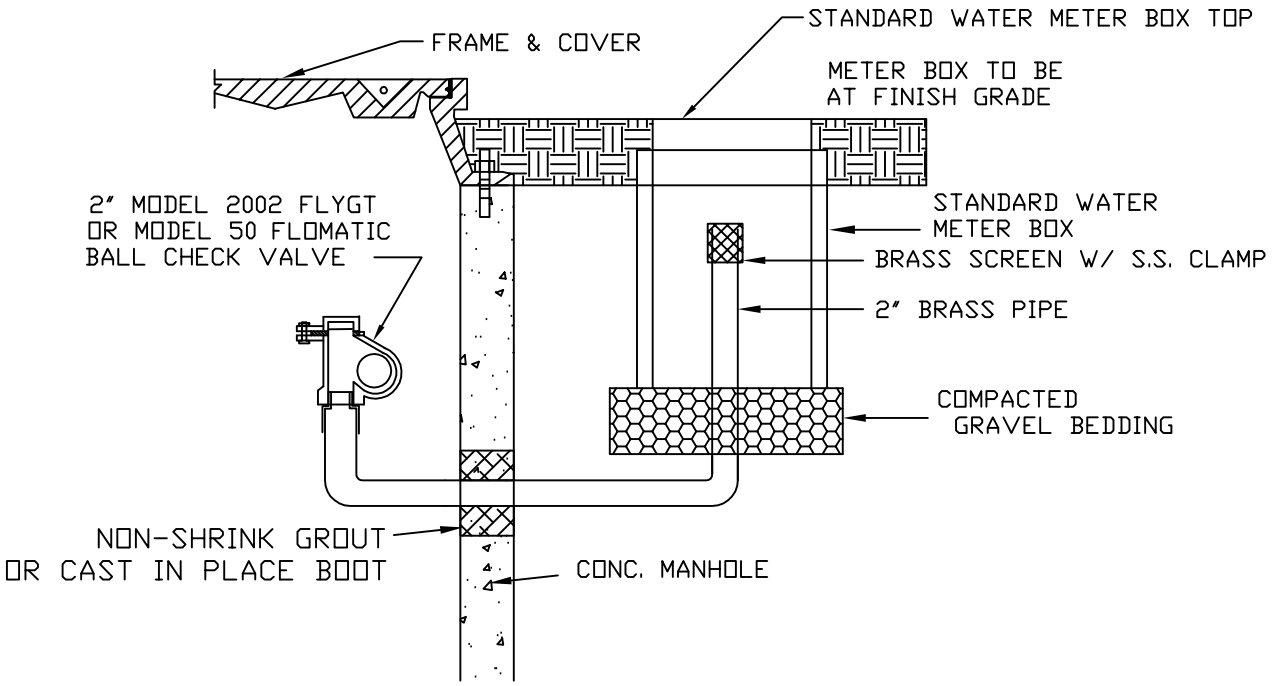


| REVISIONS | | | |
|---|---|---|---|
| NO. | DATE | | |
| ORIGINAL | 12/01/06 | | |
| | | | |
| | | | |

TYPE 2
MANHOLE VENT

DRAWING
S-22