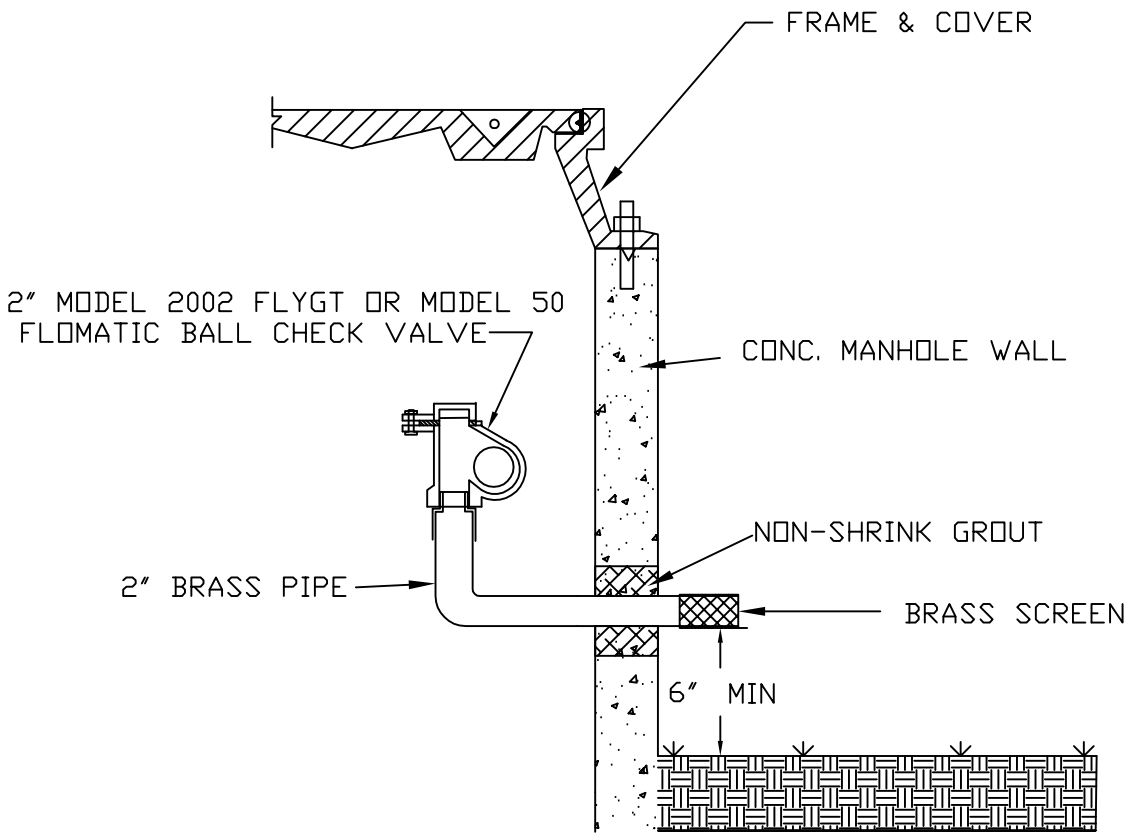

REVISIONS			
NO.	DATE		
ORIGINAL	12/01/06		

TYPE 1
MANHOLE VENT
OUT OF RIGHT OF WAY

DRAWING
S-21