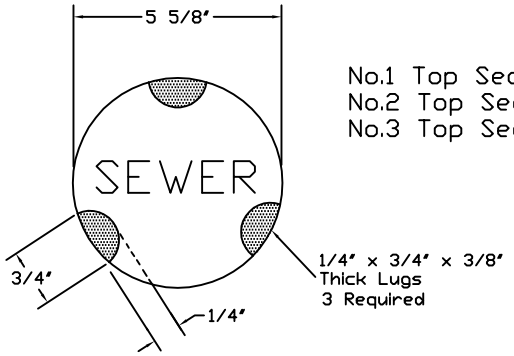

Lug Details

No.1 Top Section X - 6"
No.2 Top Section X - 9"
No.3 Top Section X - 12"

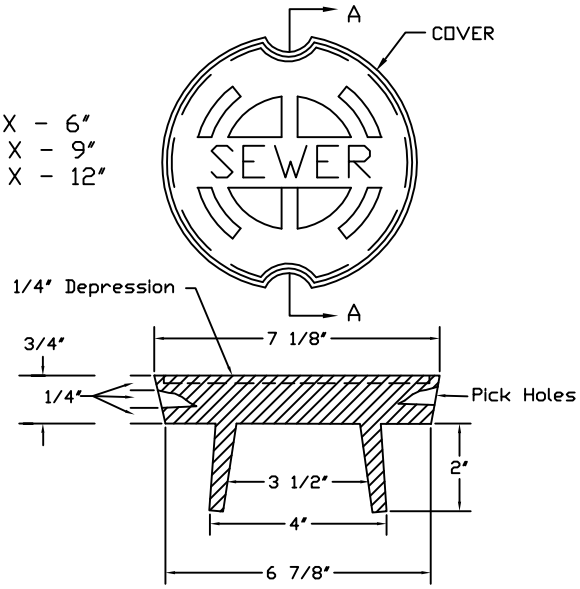

Section AA

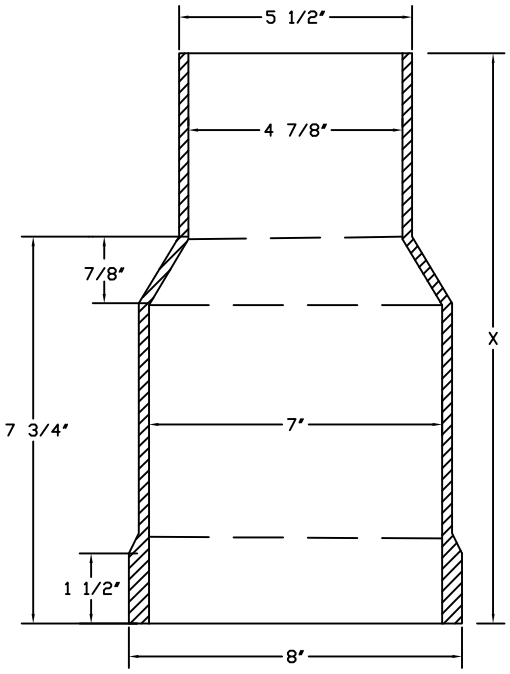

Bottom Section

No.1 Bottom Section X - 12 1/2"
No.2 Bottom Section X - 16 1/2"
No.3 Bottom Section X - 20 1/2"
No.4 Bottom Section X - 26 1/2"

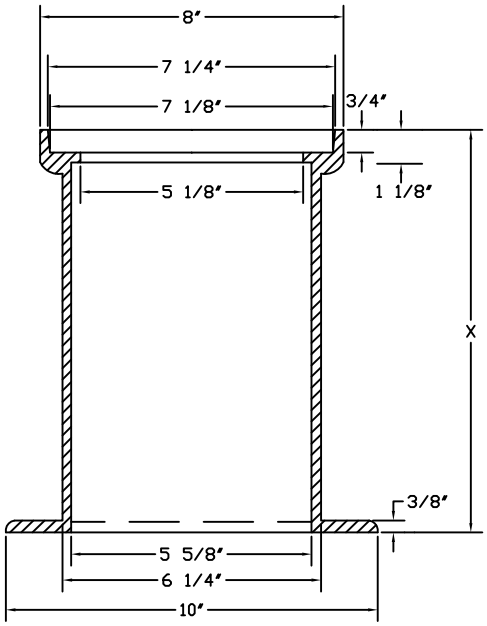

Top Section

NOTE: A MINIMUM CLEARANCE OF 4 INCHES IS REQUIRED BETWEEN CLEANOUT CAP AND TOP OF COVER.

REVISIONS			
NO.	DATE		
ORIGINAL	12/01/06		

TRAFFIC BEARING CLEANOUT BOX

DRAWING S-13