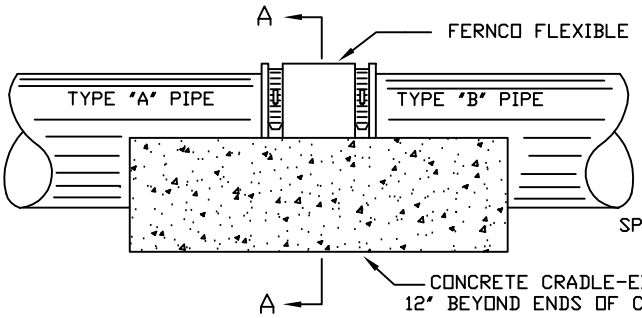

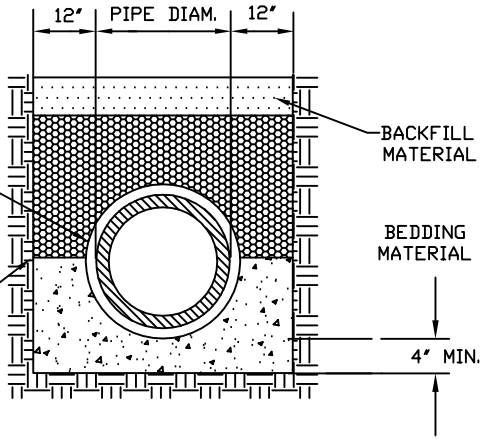

REVISIONS			
NO.	DATE		
ORIGINAL	12/01/06		

JOINING DISSIMILAR PIPE
FOR USE WITH
EXISTING PIPE

DRAWING
S-17