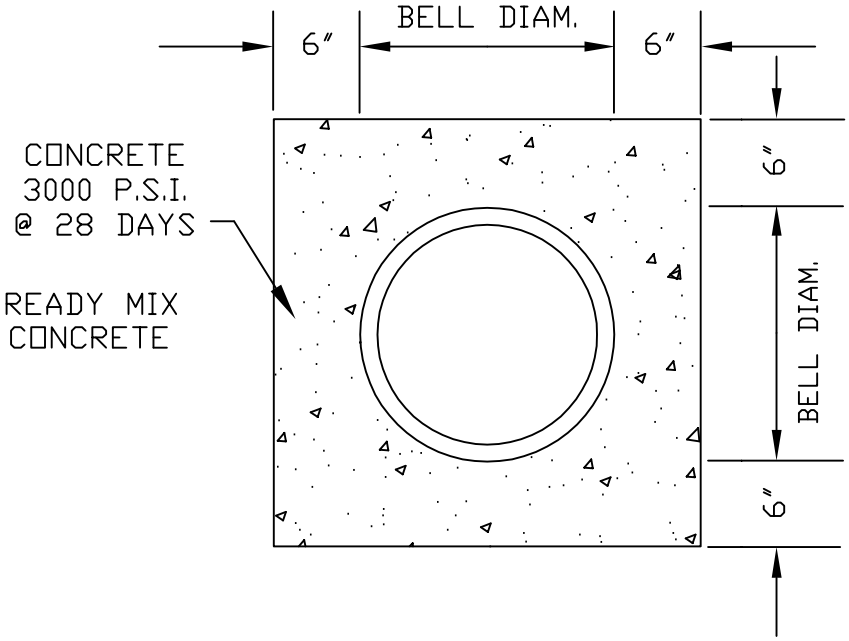

REVISIONS			
NO.	DATE		
ORIGINAL	12/01/06		

CONCRETE ENCASED PIPE

DRAWING S-16