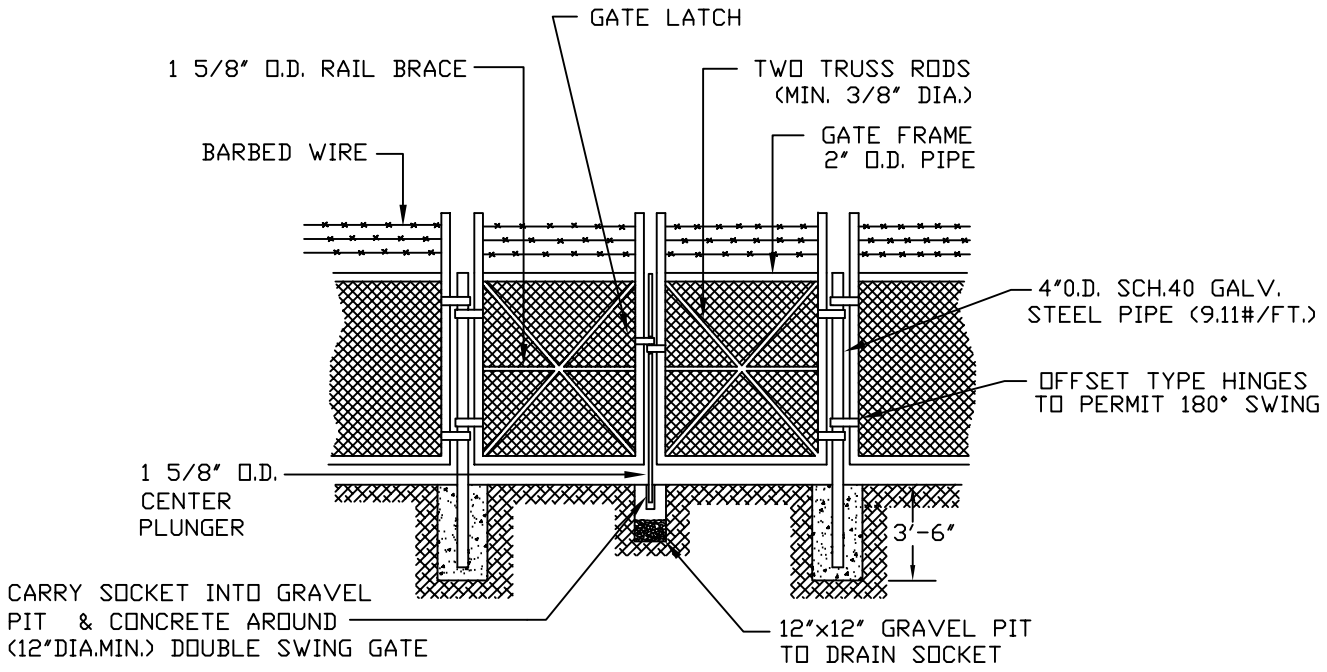

DOUBLE GATE DETAIL

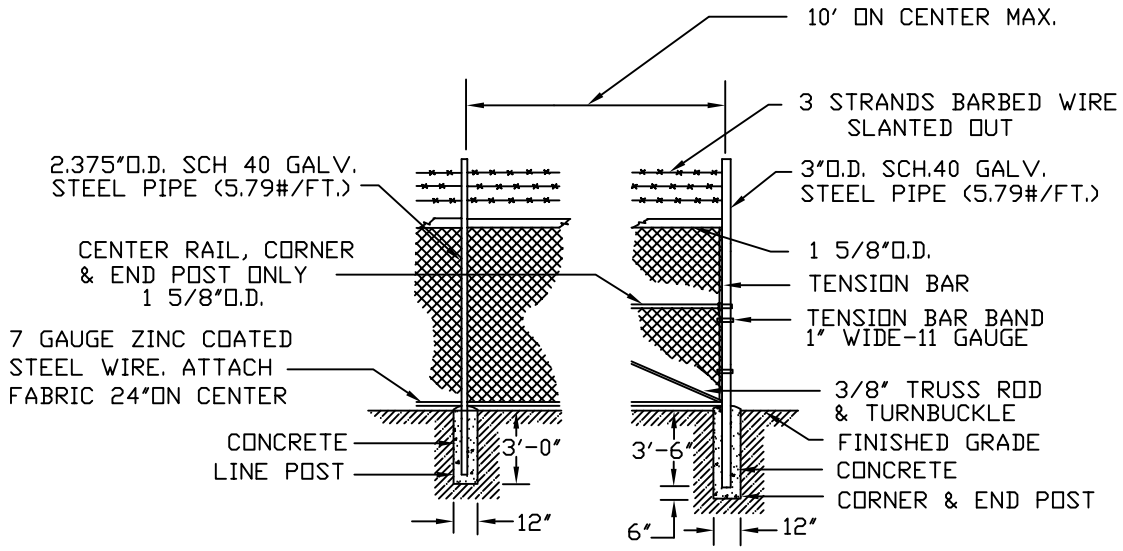

FENCE DETAIL

AS DESIGNATED BY DIRECTOR FOR SECURITY OF UTILITY INSTALLATIONS

REVISIONS			
NO.	DATE		
ORIGINAL	12/01/06		

CHAIN LINK FENCE

DRAWING S-28