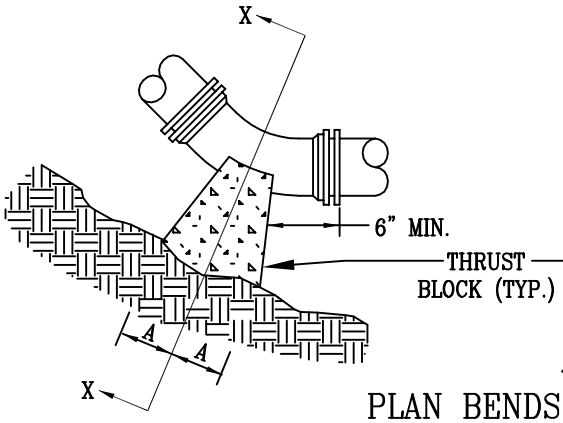

PLAN BENDS

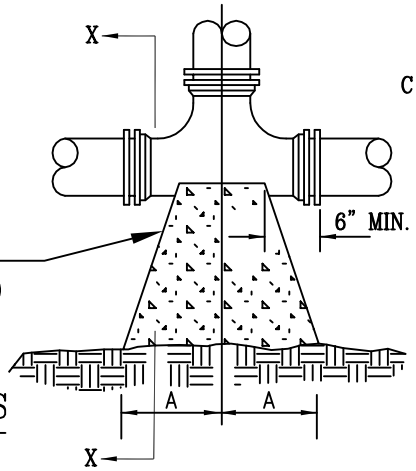

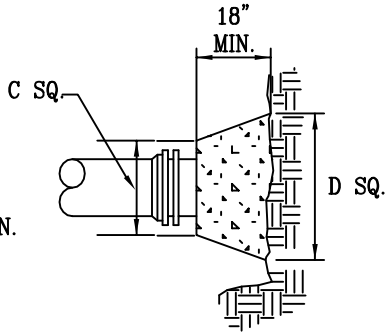

PLAN AND
ELEVATION PLUGS

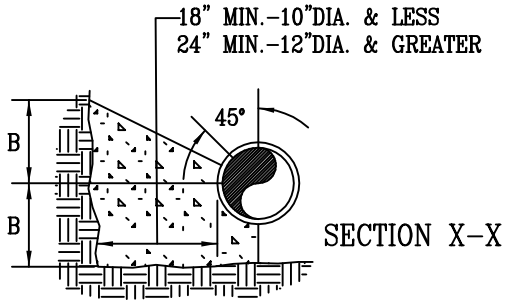

SECTION X-X

BENDS AND TEES

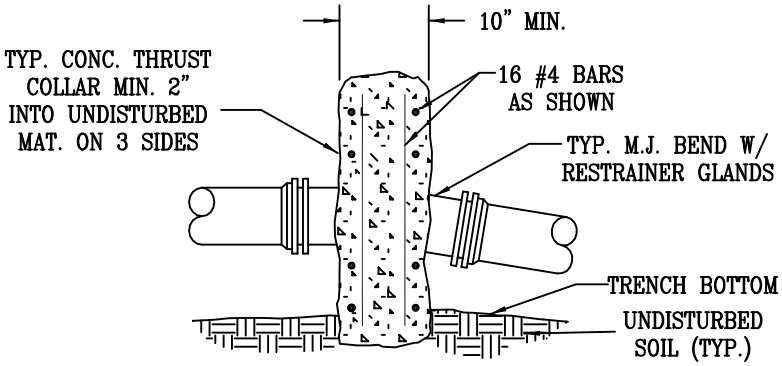

SECTION OF VERTICAL BEND

NOTES:

1. FOR VERT. BEND DOWN IN EXCESS OF 11 1/4" BEND, ANCHORAGE SHALL BE DESIGNED BY ENGINEER.
2. FOR VERT. BEND UPWARD, BLOCKING TO BE SIMILAR TO THAT FOR HORIZ. BEND.
3. GLANDS & BOLTS SHALL BE PROTECTED FROM CONC. BY PLASTIC SHEETING WHEN POURING THRUST BLOCKS.
4. ALL THRUST BLOCK & SUPPORT CONC. SHALL BE 3000 PSI READY MIX CONC.
5. THRUST BLOCKS WITH "B" DIMENSION GREATER THAN 30" SHALL HAVE THE RESTRAINED PIPE INSTALLED WITH A MINIMUM OF 4' OF COVER.

PRESSURE = 200 psi
BEARING = 2000 psf
FACTOR OF SAFETY = 1.5

PIPE	90° BEND		45° BEND		22 1/2° BEND		11 1/4° BEND		TEE		PLUG	
SIZE	A	B	A	B	A	B	A	B	A	B	C	D
4"	8"	12"	8"	8"	6"	6"	6"	6"	11"	9"	10"	6"
6"	18"	12"	8"	10"	8"	8"	8"	8"	11"	10"	12"	18"
8"	18"	13"	10"	10"	8"	8"	8"	8"	11"	12"	12"	24"
10"	20"	16"	12"	14"	8"	12"	8"	12"	14"	16"	16"	30"
12"	20"	16"	12"	14"	8"	12"	8"	12"	14"	16"	16"	30"
16"	26"	20"	16"	18"	11"	13"	11"	13"	18"	20"	20"	36"
24"	82"	42"	62"	30"	44"	22"	22"	16"	82"	42"	82"	42"
30"	185"	42"	100"	42"	52"	42"	40"	30"	185"	42"	185"	42"

REVISIONS			
NO.	DATE		
ORIGINAL	12/01/06		

THRUST BLOCK
CONSTRUCTION

DRAWING
W-19