# Montgomery County, Virginia

## BOARD OF ZONING APPEALS APPLICATION

### OWNER INFORMATION

USE CURRENT CONTACT INFORMATION FOR ALL PROPERTY OWNERS.
(AN ADDITIONAL SHEET MAY BE ATTACHED FOR MULTIPLE OWNERS)

| | | |
|---|---|---|
| Name: Glenn C. Maynard + Deborah A. Maynard | | |
| Mailing address: 1671 Willis Hollow Road | | |
| City: Shawsville | State: VA | ZIP Code: 24162 |
| Phone: 540-268-2399 | Email: gdK1671@wildblue.net | Fax: |

### AGENT INFORMATION

| | | |
|---|---|---|
| Name: N/A | | |
| Corporation: | | |
| Mailing address: | | |
| City: | State: | ZIP Code: |
| Phone: | Email: | Fax: |

### APPLICATION DETAILS

**Application For:** **Appeal of Zoning Decision:** ☐ **Variance:** ☐ **Special Use Permit:** ☒

| | |
|---|---|
| **Appeal Details:**<br>Date of Decision: | Regarding: |
| **Variance Details:**<br>Section of Zoning Ordinance: | To Allow: |
| **Special Use Permit (SUP) Details:**<br>Zoning District: A-1 | To Allow: DETACHED GARAGE IN EXCESS OF 1,200 SQFT AND 18 FT IN HEIGHT |

### PROPERTY INFORMATION

| | | |
|---|---|---|
| 911 Address of Property: 1671 WILLIS HOLLOW RD., SHAWSVILLE | | |
| Parcel ID #: 006587 | Zoning District: AGRICULTURAL A1 | Tax Map #: 098-A-11 |

### APPLICATION CHECKLIST

- ☑ Letter detailing justification for request (Variance & Appeals) or SUP Additional Requirements
- ☑ A scale drawing of the property & proposed project, with location map
- ☐ Application Fee
- ☐ Ten (10) copies of application & associated materials

### SIGNATURES

I certify that the information supplied on this application and on the attachments provided (maps and other information) is accurate and true to the best of my knowledge. I further agree to submit payment to the newspaper for costs associated with the legal advertisement of the above request. In addition, I hereby grant permission to the agents and employees of Montgomery County and the State of Virginia to enter the above property for the purposes of processing and reviewing the above application.

| | |
|---|---|
| Signature of Owner: Glenn Charles Maynard | Date: 6-30-15 |
| Signature of Owner: Deborah Alderman Maynard | Date: 6-30-2015 |
| Signature of Agent: | Date: |

### OFFICE USE ONLY

| | |
|---|---|
| Date Received: 6/30/2015 | Application Number: SU-2015-13127 |

Revised: 3/8/2013

We would like to request the boards approval to build a detached garage beside our primary residence at 1671 Willis Hollow Rd in Shawsville ,Va. The request is for a garage that used primarily for our personal vehicles, tractor, farming equipment and for a personal work shop and storage area for personal belongings.

The size of the garage will be 48' x 32'x12' with 12/12 pitch roof constructed with attic trusses that will provide an additional room upstairs that will measure 48' × 16' ×8' of unfinished space. The walls are pre-fabricated panels constructed with 2"×6"×12' studs on 16" centers covered with 7/16" OSB sheathing. Roof will consist of 3/4" exterior plywood finished with standing seam metal roofing.

The finished exterior walls will consist of stone veneer wanscott 4' high and finished to eaves and gable ends with Hardie board siding. Color scheme includes Black roof, earth tone walls and White trim and gutters.

Garage will be constructed on 5" concrete slab with traditional footers and block to grade height.

An electric and plumbing permit will be requested to rough in future electric service and water supply for utility sink with location under inside stairs to conserve floor area. Drain will be attached to existing septic system at time of completion of plumbing and electrical, expected in 12 to 24 months.

The garage doors will be located in the front of the garage and measure 12' wide and 10' in height with a standard 36" 6-panel steel door located at the rear of the left side which will face the primary dwelling.

Glenn C Maynard
Deborah A. Maynard

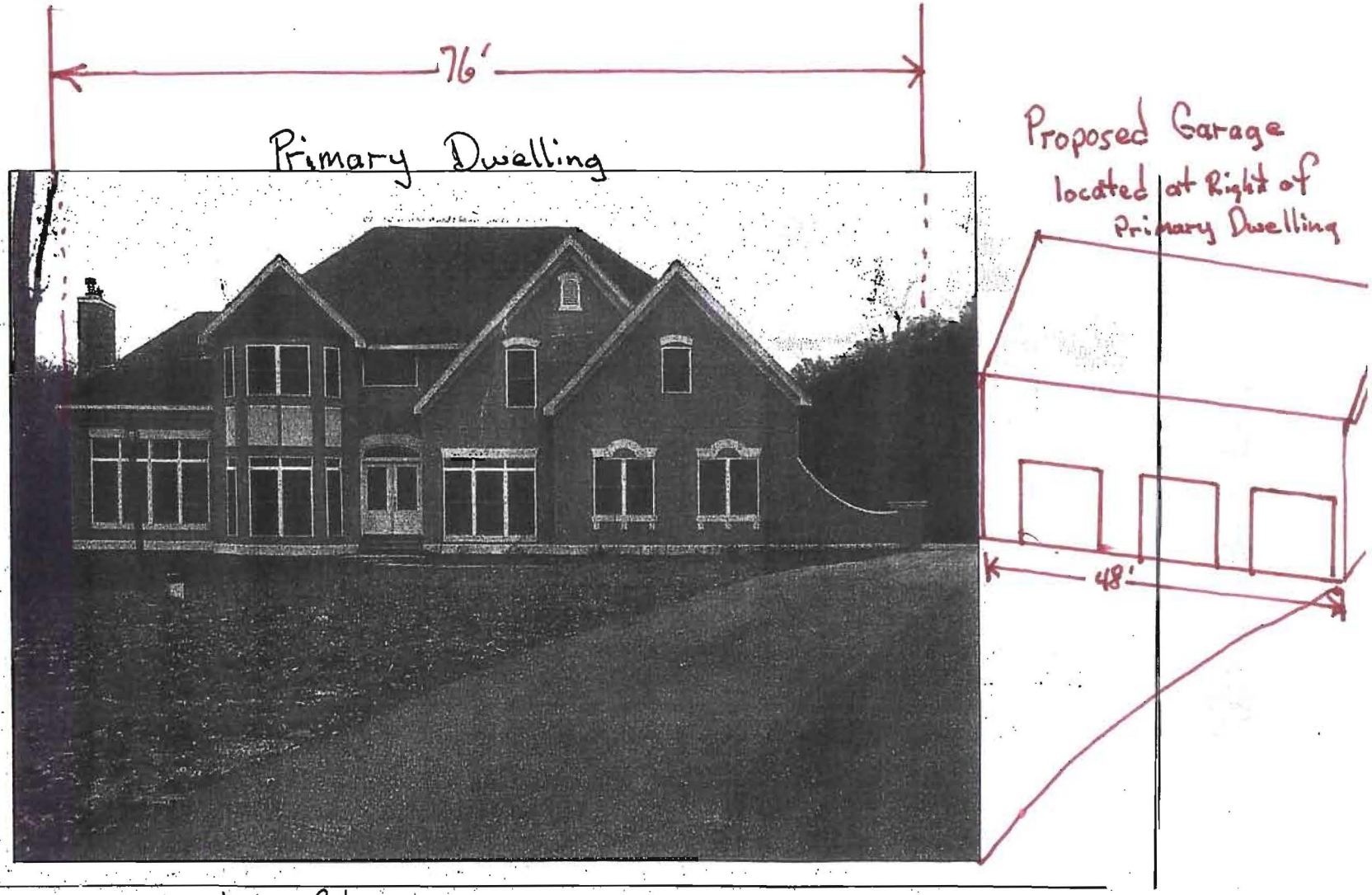


1671 Willis Hollow Rd. Shawsville. VA

3-story - Grey Dryvit, Stone Foundation, White trim
Hardie board siding on rear and left + right sides.
Stone chimney

## Second Floor

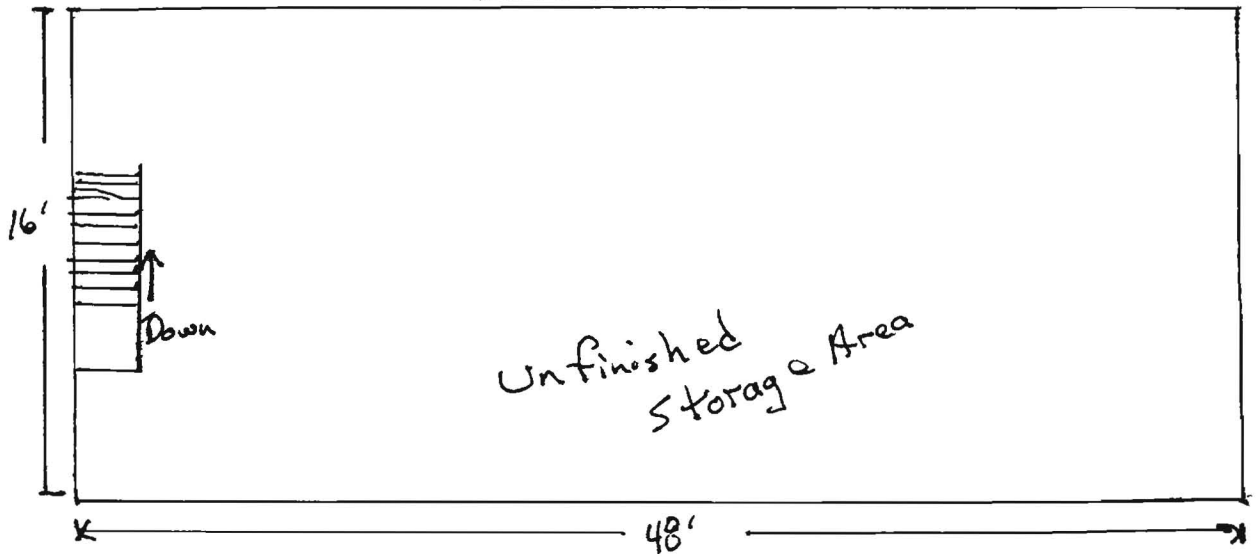


## First Floor

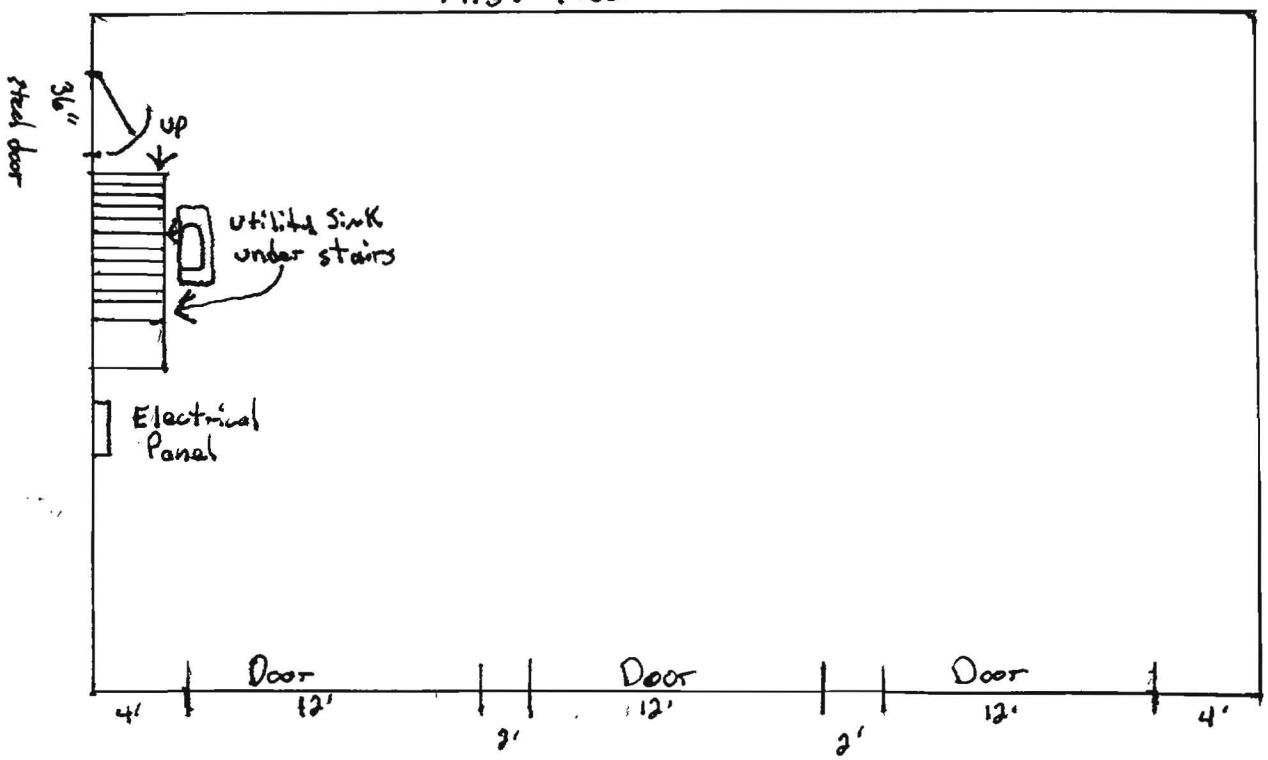

Garage size: 48' x 32' x 12'

Walls: 2"x6" x 12'

Roof: 12/12 pitch with Attic Trusses

Beams over Garage door openings for maximum strength.

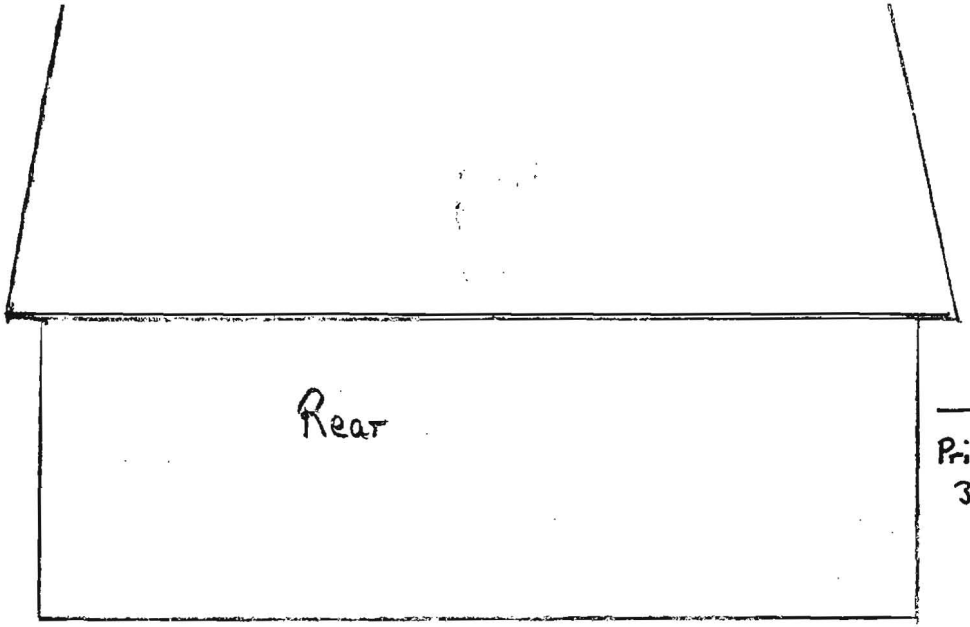


Primary Dwelling 34' away.

Sheathing: Exterior Plywood or OSB at least ½" thick.

Overhang 2' - Eves
1' - Gable end

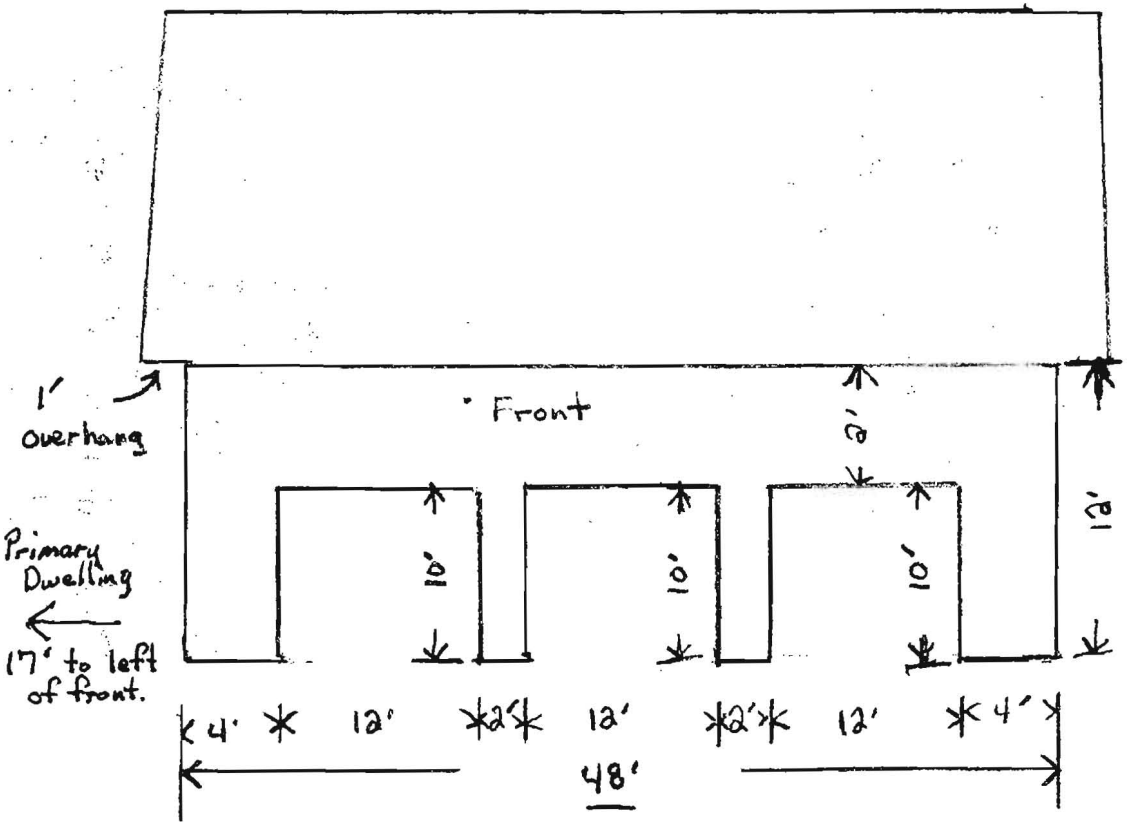


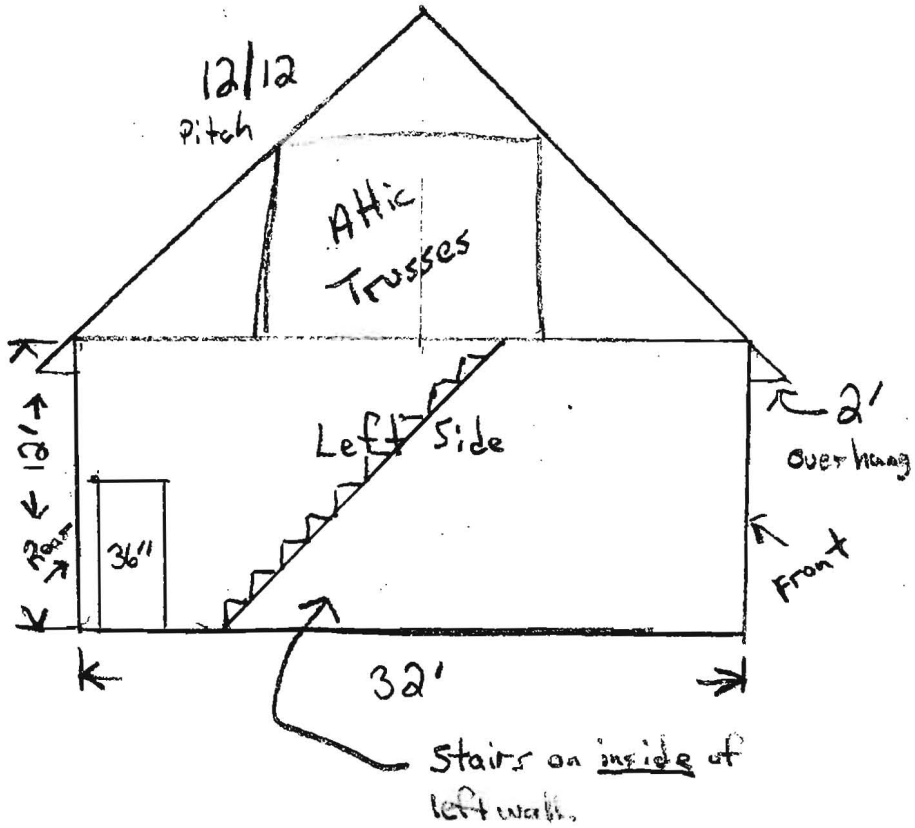

Representation of Finish Material

DATE04/02/15 PAGE 1

# Non-Itemized QUOTE Estimate

## UFP Mid-Atlantic, LLC

| | | | |
|---|---|---|---|
| REQ. QUOTE DATE | 04/03/15 | ORDER # | |
| ORDER DATE | / / | QUOTE # | 15033089 |
| DELIVERY DATE | / / | CUSTOMER ACCT # | EIGE1707 |
| DATE OF INVOICE | / / | CUSTOMER PO # | |
| ORDERED BY | ALEX | INVOICE # | |
| | | TERMS | WO |
| SUPERINTENDENT | ALEX | SALES REP | 613 Randall |
| JOBSITE PHONE # | | SALES AREA | 261 Pearisburg |

84 LBR OF
84 LBR OF
EIGHTY FOUR, PA 15330
(540) 382-1417

JOB NAME: GLEN MAYNARD LOT # SUBDIV:
MODEL: TAG: 90,25,100,02,B JOB CATEGORY: RR
DELIVERY INSTRUCTIONS:
SPECIAL INSTRUCTIONS:

| BUILDING DEPARTMENT | OVERHANG INFO | | HEEL HEIGHT | 00-04-03 | REQ. LAYOUTS | REQ. ENGINEERING | | BY | DATE |
|---|---|---|---|---|---|---|---|---|---|
| X | END CUT | RETURN | | | NONE | NONE | QUOTE | oh3 | 03/27/15 |
| | PLUMB | | GABLE STUDS | 24 IN. OC | | | LAYOUT | | / / |
| | | | | | | | CUTTING | | / / |

## ROOF TRUSSES

LOADING INFORMATION: TCLL-TCDL-BCLL-BCDL 20.0,10.0,0.0,10.0; STRESS INCR. 1.15

ROOF TRUSS SPACING: 24.0 IN. O.C. (TYP.)

| PROFILE | QTY PLY | PITCH TOP | PITCH BOT | TYPE ID | BASE SPAN | O/A SPAN | LUMBER TOP | LUMBER BOT | OVERHANG LEFT | OVERHANG RIGHT | CANTILEVER LEFT | CANTILEVER RIGHT | STUB LEFT | STUB RIGHT | |
|---|---|---|---|---|---|---|---|---|---|---|---|---|---|---|---|
| | 21 | 12.00 | 0.00 | ATTIC A1 | 32-00-00 | 32-00-00 | 2 X 6 | 2 X | 01-10-08 | 01-10-08 | | | | | |
| | 2 | 12.00 | 0.00 | GABLE A1G | 32-00-00 | 32-00-00 | 2 X 6 | 2 X | 01-10-08 | 01-10-08 | | | | | |
| | 1 2 Ply | 12.00 | 0.00 | ATTIC A1L | 32-00-00 | 32-00-00 | 2 X 6 | 2 X | 01-10-08 | 01-10-08 | | | | | |
| | 21 | 12.00 | 0.00 | PIGGYBACK C1 | 11-11-03 | 11-11-03 | 2 X 4 | 2 X 4 | | | | | | | |
| | 2 | 12.00 | 0.00 | GABLE C1G | 11-11-03 | 11-11-03 | 2 X 4 | 2 X 4 | | | | | | | |
| | 1 2 Ply | 12.00 | 0.00 | PIGGYBACK C1L | 11-11-03 | 11-11-03 | 2 X 4 | 2 X 4 | | | | | | | |

ACCEPTED BY SELLER

BY:

TITLE:

DATE OF ACCEPTANCE:

ACCEPTED BY BUYER

PURCHASER:

BY: TITLE:

ADDRESS:

PHONE: DATE:

| | |
|---|---|
| SUB-TOTAL | |
| | |
| | |
| | |
| | |
| | |
| GRAND TOTAL | |

Quote is based on current design values at the time of quote (lumber, EWP, hardware, etc). Should any of these values change prior to completion of this project, UFP Mid-Atlantic, LLC reserves the right to adjust the sell price accordingly.

FOR REVIEW AND SIGN OFF!
NOT FOR CONSTRUCTION PURPOSES!

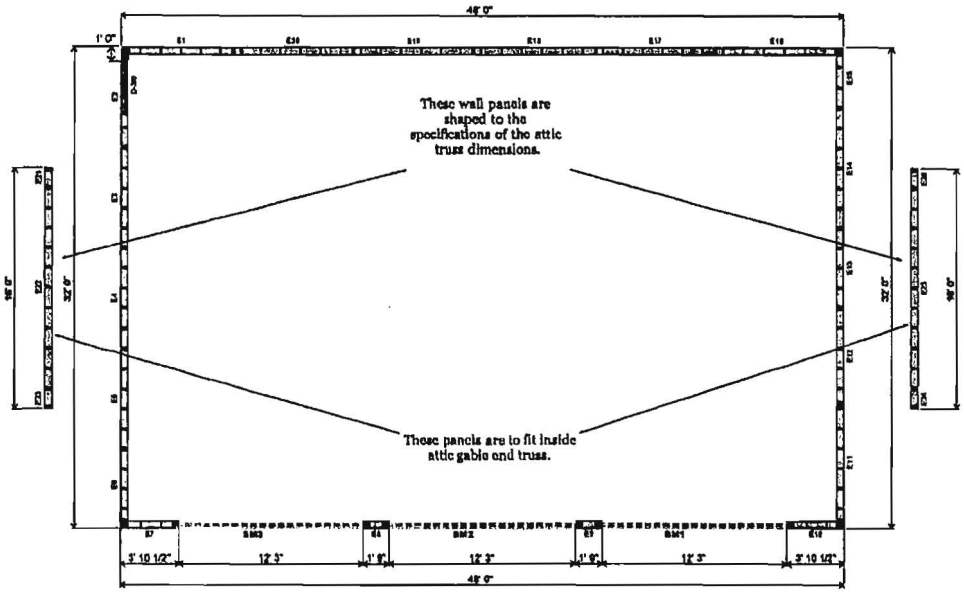


Dimensions to outside of sheathing.

| Products | | | | | |
|---|---|---|---|---|---|
| Plate ID | Length | Product | Plies | Net Qty |
| BM1 | 14' 0" | 1-3/4x11-7/8 LP-LVL 2900Fb-2.0E | 2 | 2 |
| BM2 | 14' 0" | 1-3/4x11-7/8 LP-LVL 2900Fb-2.0E | 2 | 2 |
| BM3 | 14' 0" | 1-3/4x11-7/8 LP-LVL 2900Fb-2.0E | 2 | 2 |

| Panel | | | | | | | |
|---|---|---|---|---|---|---|---|
| Bundle | Label | Length | Height | Thickness | Stud Size | Load Bearing | Sheathing |
| 1 | E14 | 8' 0" | 12' 0" | 5 1/2" | 2x6 SPF No.2 | LB | 7/16 4x8 OSB |
| 1 | E7 | 3' 10" | 12' 0" | 5 1/2" | 2x6 SPF No.2 | LB | 7/16 4x8 OSB |
| 1 | E19 | 8' 0" | 12' 0" | 5 1/2" | 2x6 SPF No.2 | LB | 7/16 4x8 OSB |
| 1 | E16 | 8' 11 1/2" | 12' 0" | 5 1/2" | 2x6 SPF No.2 | LB | 7/16 4x8 OSB |
| 1 | E20 | 8' 0" | 12' 0" | 5 1/2" | 2x6 SPF No.2 | LB | 7/16 4x8 OSB |
| 1 | E3 | 8' 8" | 12' 0" | 5 1/2" | 2x6 SPF No.2 | LB | 7/16 4x8 OSB |
| 1 | E4 | 8' 8" | 12' 0" | 5 1/2" | 2x6 SPF No.2 | LB | 7/16 4x8 OSB |
| 1 | E5 | 8' 8" | 12' 0" | 5 1/2" | 2x6 SPF No.2 | LB | 7/16 4x8 OSB |
| 1 | E13 | 5' 4" | 12' 0" | 5 1/2" | 2x6 SPF No.2 | LB | 7/16 4x8 OSB |
| 1 | E6 | 4' 9 1/2" | 12' 0" | 5 1/2" | 2x6 SPF No.2 | LB | 7/16 4x8 OSB |
| 1 | E17 | 8' 0" | 12' 0" | 5 1/2" | 2x6 SPF No.2 | LB | 7/16 4x8 OSB |
| 1 | E9 | 1' 8" | 12' 0" | 5 1/2" | 2x6 SPF No.2 | LB | 7/16 4x8 OSB |
| 1 | E8 | 1' 9" | 12' 0" | 5 1/2" | 2x6 SPF No.2 | LB | 7/16 4x8 OSB |
| 1 | E10 | 3' 10" | 12' 0" | 5 1/2" | 2x6 SPF No.2 | LB | 7/16 4x8 OSB |
| 1 | E11 | 7' 10" | 12' 0" | 5 1/2" | 2x6 SPF No.2 | LB | 7/16 4x8 OSB |
| 1 | E12 | 8' 4" | 12' 0" | 5 1/2" | 2x6 SPF No.2 | LB | 7/16 4x8 OSB |
| 1 | E18 | 8' 0" | 12' 0" | 5 1/2" | 2x6 SPF No.2 | LB | 7/16 4x8 OSB |
| 1 | E15 | 8' 0" | 12' 0" | 5 1/2" | 2x6 SPF No.2 | LB | 7/16 4x8 OSB |
| 1 | E1 | 7' 0" | 12' 0" | 5 1/2" | 2x6 SPF No.2 | LB | 7/16 4x8 OSB |
| 1 | E2 | 6' 8" | 12' 0" | 5 1/2" | 2x6 SPF No.2 | LB | 7/16 4x8 OSB |
| 2 | E22 | 13' 4 3/8" | 6' 1 1/8" | 5 1/2" | 2x6 SPF No.2 | LB | 7/16 4x8 OSB |
| 2 | E24 | 1' 3 13/16" | 6' 1 1/8" (Raked) | 5 1/2" | 2x6 SPF No.2 | LB | 7/16 4x8 OSB |
| 2 | E23 | 1' 3 13/16" | 6' 1 1/8" (Raked) | 5 1/2" | 2x6 SPF No.2 | LB | 7/16 4x8 OSB |
| 2 | E26 | 1' 3 13/16" | 6' 1 1/8" (Raked) | 5 1/2" | 2x6 SPF No.2 | LB | 7/16 4x8 OSB |
| 2 | E21 | 1' 3 13/16" | 6' 1 1/8" (Raked) | 5 1/2" | 2x6 SPF No.2 | LB | 7/16 4x8 OSB |
| 2 | E25 | 13' 4 3/8" | 6' 1 1/8" | 5 1/2" | 2x6 SPF No.2 | LB | 7/16 4x8 OSB |

| Door | | | | | |
|---|---|---|---|---|---|
| Quantity | Label | Width | Height | Header Height | Header Material |
| 1 | D-3/0 | 3' 2" | 6' 10" | 6' 10" | 2x12 SP No.2 |

Approved
G C Maynard 5/4/15

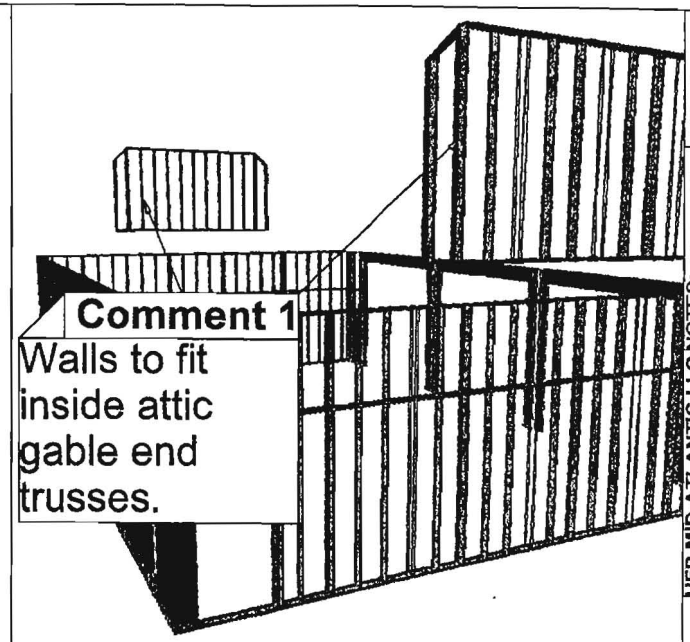


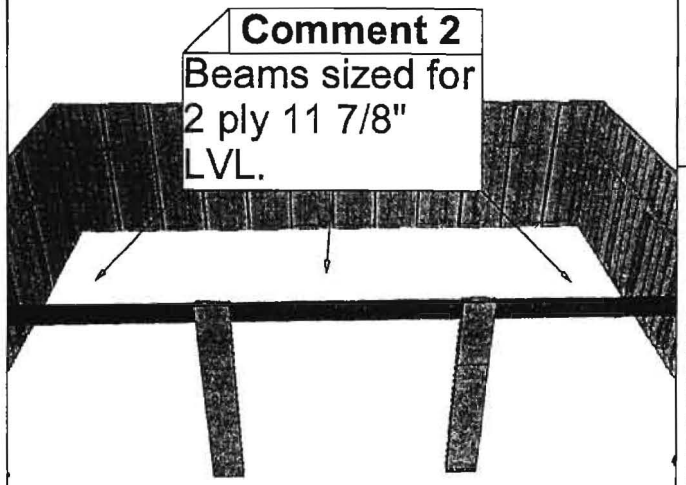


NOTES: THIS DRAWING IS THE PROPERTY OF UFP MID-ATLANTIC, LLC AND IS NOT TO BE USED FOR ANY PURPOSE DETRIMENTAL TO THE INTEREST OF UFP MID-ATLANTIC, LLC THIS DRAWING MUST BE USED IN CONJUNCTION WITH ALL OTHER TECHNICAL DRAWINGS SUPPLIED BY UFP MID-ATLANTIC LLC.

This layout is not an engineered drawing. This drawing was created to establish joist placement only. It is the responsibility of the builder to provide adequate support for all the elements shown in this drawing.

UFP MID-ATLANTIC, LLC
A UNIVERSAL FOREST PRODUCTS COMPANY

| | | |
|---|---|---|
| BURLINGTON, NC | PHONE (800) 476-9055 | |
| Liberty, NC | PHONE (336) 622-5803 | |
| CONWAY, SC | PHONE (800) 367-6072 | |
| JEFFERSON, GA | PHONE (800) 848-4038 | |

Job Notes *
* FOR REVIEW
* ONLY!

Customer: B4 LUMBER CHRISTIANSBURG
Job Name: GLEN MAYNARD
Drawn By: MVE
Checked By: MVE
Drawing Number: **********

Quality Products for Quality Builders®
Date: 2/9/15
Revision Date: 5/4/2015
Revision Date:

TRUSS TO WALL CONNECTIONS, IF SHOWN, ARE FOR UPLIFT ONLY AND DO NOT CONSIDER LATERAL LOADS. ALL CONNECTORS ON THIS PROJECT ARE TO BE INSTALLED PER THE CONNECTOR MANUFACTURER'S SPECIFICATIONS. ALL CONNECTORS SHOWN THAT ARE NOT "TRUSS TO TRUSS" ARE SUGGESTIONS ONLY AND ARE TO BE VERIFIED BY THE BUILDING DESIGNER OR ENGINEER OF RECORD FOR SUITABILITY TO THIS PARTICULAR PROJECT. UFP MID-ATLANTIC, LLC. ACCEPTS NO RESPONSIBILTY FOR THE SPECIFIC APPLICATION OR SUITIBILTY OF ANY CONNECTOR THAT IS NOT "TRUSS TO TRUSS" AS THEY APPLY TO THIS SPECIFIC STRUCTURE.

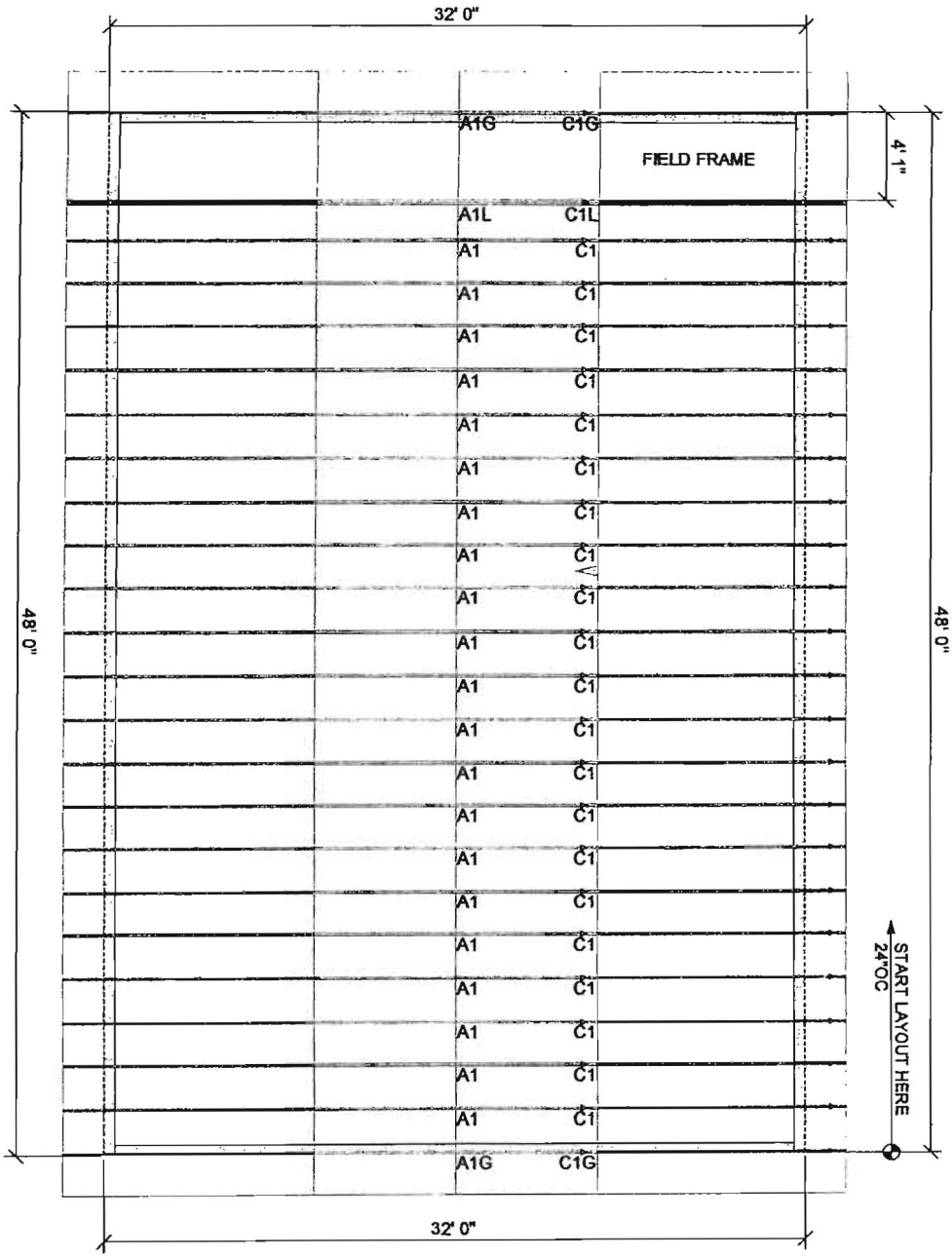


TRUSSES 24" O.C.

Roof Area:..... 2616.38
Total Ridge Length:..... 51.75
Total Hip Line Length:.....0
Total Valley Line Length:.0

DRAWING NOT TO SCALE

ROOF AREA: 2616___ RIDGE LINE: 51.75 _____ VALLEY LINES: 0 _____ HIP LINES:0 _____

1-800-397-3571
CHRIS

1503089

CUSTOMER
84 CHRISTIANSBURG
Job Name
GLEN MAYNARD
Date: 05/23/2016
Scale: NTS
Quality Products for Quality Builders
Revision Date1: _____
Revision Date2: _____

NOTES: THIS DRAWING IS THE PROPERTY OF UFP MID-ATLANTIC, LLC AND WHICH IS BEING LOANED FOR ANY PURPOSE DEEMED ESSENTIAL TO THE INTEREST OF UFP MID-ATLANTIC, LLC. THIS DRAWING MUST BE RETURNED UPON REQUEST. INSTALLATION INSTRUCTIONS, DRAWINGS SUPPLIED BY UFP MID-ATLANTIC, LLC (MPI DRAWING) WHICH TRANSMIT WORKING STRESS INFORMATION AS PUBLISHED BY THE TRUSS PLATE INSTITUTE FOR INSTALLING SEMI-RIGID CONNECTING TRUSSES. (FRAME LOCATIONS INDICATED ON PLATE SUITE 2000 ARLINGTON, VIRGINIA 22209 (703) 683-1010)

UFP MID-ATLANTIC,LLC
A UNIVERSAL FOREST PRODUCTS COMPANY

| | |
|---|---|
| BURLINGTON, NC | PHONE (336) 476-6356 |
| CHESAPEAKE, VA | PHONE (757) 420-3788 |
| CONWAY, SC | PHONE (843) 397-3572 |
| JEFFERSON, GA | PHONE (706) 616-6038 |
| PEARISBURG, VA | PHONE (540) 387-5571 |

1. TEMPORARY BRACING TO BE INSTALLED w/T.P.I. STANDARD BCSI-B1.
2. SEE ENGINEERED DRAWING FOR PERMANENT BRACING MINIMUM REQUIREMENTS.
3. FRAMER TO VERIFY ALL DIMENSIONS, DROP, & RIDGE LOCATIONS PRIOR TO TRUSS PLACEMENT.
4. BLDR/FRAMER RESPONSIBLE FOR ADJUSTMENT OF TRUSS SPACING TO MEET PLUMBING DROPS, UNLESS NOTED OTHERWISE.

This layout is not an engineered drawing. This drawing was created to establish truss placement only. It is the responsibility of the builder to provide adequate support for all the elements shown in this drawing.

| Job | Truss | Truss Type | Qty | Ply | GLEN MAYNARD |
|---|---|---|---|---|---|
| 15033089 | C1L | PIGGYBACK | 1 | 2 | Job Reference (optional) |

UFP Mid-Atlantic LLC, .

7.520 s May 8 2014 MiTek Industries, Inc. Fri Mar 27 09:54:42 2015 Page 1
ID:GHIPt8kZTEV1GcraaOIlv8zWhWT-L_HLjjXzxWpfBltGRFTDa34elAqokvmlB_QRYczWhVR

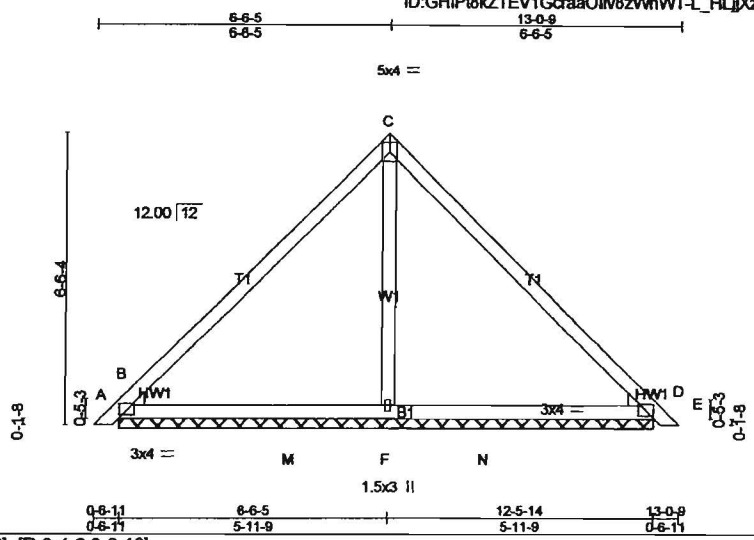


Plate Offsets (X,Y)-- [B:0-4-0,0-0-10], [D:0-4-0,0-0-10]

| LOADING (psf) | | SPACING- | 3-0-0 | CSI. | | DEFL. | in | (loc) | l/defl | L/d | PLATES | GRIP |
|---|---|---|---|---|---|---|---|---|---|---|---|---|
| TCLL | 30.0 | Plates Increase | 1.15 | TC | 0.44 | Vert(LL) | 0.01 | E | n/r | 120 | MT20 | 244/190 |
| TCDL | 10.0 | Lumber Increase | 1.15 | BC | 0.34 | Vert(TL) | 0.01 | E | n/r | 90 | | |
| BCLL | 0.0 * | Rep Stress Incr | NO | WB | 0.04 | Horz(TL) | 0.00 | B | n/a | n/a | | |
| BCDL | 10.0 | Code IRC2012/TPI2007 | | (Matrix-M) | | | | | | | Weight: 109 lb | FT = 4% |

**LUMBER-**
TOP CHORD 2x4 SP No.2
BOT CHORD 2x4 SP No.2
WEBS 2x4 SP No.3
WEDGE
Left: 2x4 SP No.2, Right: 2x4 SP No.2

**BRACING-**
TOP CHORD 2-0-0 oc purlins (6-0-0 max.)
(Switched from sheeted: Spacing > 2-0-0).
BOT CHORD Rigid ceiling directly applied or 10-0-0 oc bracing.

**REACTIONS.** (lb/size) B=684/11-11-3, D=684/11-11-3, F=506/11-11-3, B=684/11-11-3, D=684/11-11-3
Max Horz B=183(LC 7)
Max UpliftB=-62(LC 8), D=-82(LC 9)
Max GravB=684(LC 1), D=684(LC 1), F=638(LC 15), B=684(LC 1), D=684(LC 1)

**FORCES.** (lb) - Maximum Compression/Maximum Tension
TOP CHORD A-B=0/30, B-C=-849/184, C-D=-855/189, D-E=0/30
BOT CHORD B-M=-1133/2566, F-M=-26/236, F-N=-26/236, D-N=-1029/2463
WEBS C-F=-238/0

**NOTES-**
1) 2-ply truss to be connected together with 10d (0.131"x3") nails as follows:
Top chords connected as follows: 2x4 - 1 row at 0-9-0 oc.
Bottom chords connected as follows: 2x4 - 1 row at 0-9-0 oc.
Webs connected as follows: 2x4 - 1 row at 0-9-0 oc.
2) All loads are considered equally applied to all plies, except if noted as front (F) or back (B) face in the LOAD CASE(S) section. Ply to ply connections have been provided to distribute only loads noted as (F) or (B), unless otherwise indicated.
3) Unbalanced roof live loads have been considered for this design.
4) Wind: ASCE 7-10; Vult=115mph (3-second gust) V(IRC2012)=91mph; TCDL=6.0psf; BCDL=6.0psf; h=25ft; Cat. II; Exp B; enclosed; MWFRS (envelope) gable end zone; cantilever left and right exposed ; end vertical left and right exposed; Lumber DOL=1.60 plate grip DOL=1.60
5) Gable requires continuous bottom chord bearing.
6) This truss has been designed for a 10.0 psf bottom chord live load nonconcurrent with any other live loads.
7) * This truss has been designed for a live load of 20.0psf on the bottom chord in all areas where a rectangle 3-6-0 tall by 2-0-0 wide will fit between the bottom chord and any other members, with BCDL = 10.0psf.
8) Provide mechanical connection (by others) of truss to bearing plate capable of withstanding 62 lb uplift at joint B, 82 lb uplift at joint D, 62 lb uplift at joint B and 82 lb uplift at joint D.
9) This truss is designed in accordance with the 2012 International Residential Code sections R502.11.1 and R802.10.2 and referenced standard ANSI/TPI 1.
10) "Semi-rigid pitchbreaks with fixed heels" Member end fixity model was used in the analysis and design of this truss.
11) See standard piggyback truss connection detail for connection to base truss.
12) Graphical purlin representation does not depict the size or the orientation of the purlin along the top and/or bottom chord.

**LOAD CASE(S)** Standard

| Job | Truss | Truss Type | Qty | Ply | GLEN MAYNARD |
|---|---|---|---|---|---|
| 15033089 | A1 | ATTIC | 21 | 1 | Job Reference (optional) |

UFP Mid-Atlantic LLC, .

7.520 s May 8 2014 MiTek Industries, Inc. Fri Mar 27 09:54:33 2015 Page 1
ID:zAvmNtFMiYz4zEsZApg2B6zWner-5FEyreQK2fhxcMhXQsp6jAD0XYd57eJR75kSkdzWnVa

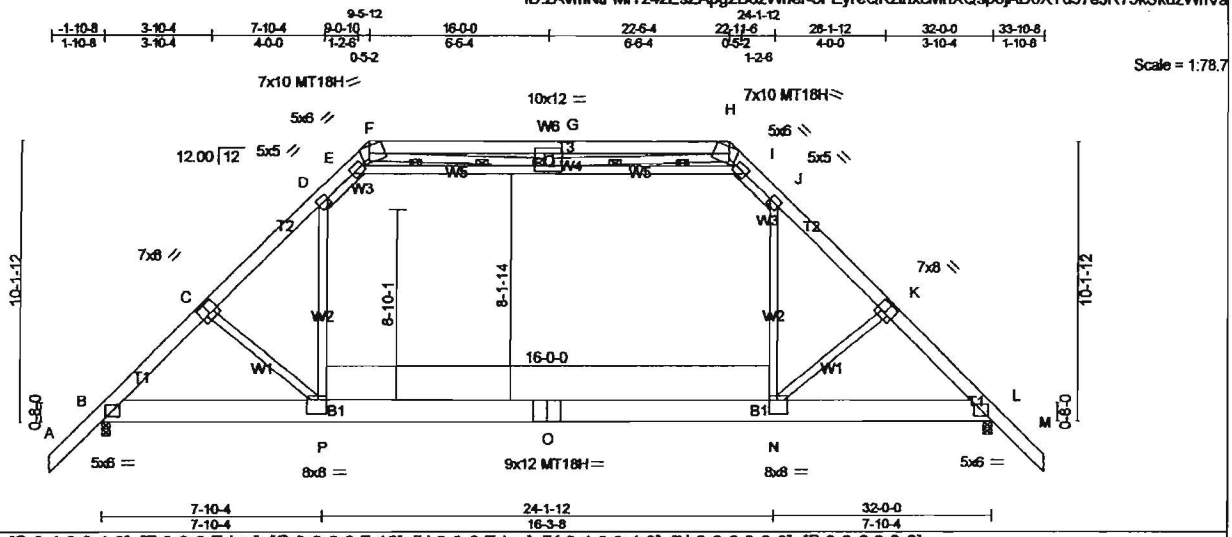


Plate Offsets (X,Y)-- [C:0-4-0,0-4-8], [F:0-3-8,Edge], [G:0-6-0,0-7-12], [H:0-3-8,Edge], [K:0-4-0,0-4-8], [N:0-3-8,0-6-0], [P:0-3-8,0-6-0]

| LOADING (psf) | | SPACING- | 2-0-0 | CSI. | | DEFL. | in | (loc) | l/defl | L/d | PLATES | GRIP |
|---|---|---|---|---|---|---|---|---|---|---|---|---|
| TCLL | 30.0 | Plates Increase | 1.15 | TC | 0.77 | Vert(LL) | -0.43 | N-P | >887 | 240 | MT20 | 244/190 |
| TCDL | 10.0 | Lumber Increase | 1.15 | BC | 0.96 | Vert(TL) | -0.60 | N-P | >636 | 180 | MT18H | 244/190 |
| BCLL | 0.0 * | Rep Stress Incr | YES | WB | 0.82 | Horz(TL) | 0.04 | L | n/a | n/a | | |
| BCDL | 10.0 | Code IRC2012/TPI2007 | | (Matrix-M) | | Attic | -0.34 | N-P | 571 | 360 | Weight: 316 lb | FT = 4% |

**LUMBER-**
TOP CHORD 2x6 SP No.2
BOT CHORD 2x10 SP No.1
WEBS 2x4 SP No.3 *Except*
W2: 2x4 SP No.2

**BRACING-**
TOP CHORD Structural wood sheathing directly applied or 4-0-1 oc purlins, except
2-0-0 oc purlins (3-11-13 max.): F-H.
BOT CHORD Rigid ceiling directly applied or 2-2-0 oc bracing.
WEBS 2 Rows at 1/3 pts E-Q, I-Q
JOINTS 1 Brace at Jt(s): Q

**REACTIONS.** (lb/size) B=1832/0-3-8, L=1832/0-3-8
Max Horz B=222(LC 7)
Max Grav B=2052(LC 2), L=2052(LC 2)

**FORCES.** (lb) - Maximum Compression/Maximum Tension
TOP CHORD A-B=0/106, B-C=-2735/0, C-D=-2587/0, D-E=-1651/6, E-F=-715/249, H-I=-715/249, I-J=-1651/7, J-K=-2587/0, K-L=-2735/0, L-M=0/106, F-G=-2117/479, G-H=-2117/479
BOT CHORD B-P=0/1921, O-P=0/1755, N-O=0/1755, L-N=0/1869
WEBS E-Q=-1954/71, I-Q=-1955/71, D-P=0/1202, J-N=0/1202, G-Q=-319/94, C-P=-298/171, K-N=-298/171, F-Q=-413/1986, H-Q=-413/1986

**NOTES-**
1) Unbalanced roof live loads have been considered for this design.
2) Wind: ASCE 7-10; Vult=115mph (3-second gust) V(IRC2012)=91mph; TCDL=6.0psf; BCDL=6.0psf; h=25ft; Cat. II; Exp B; enclosed; MWFRS (envelope) gable end zone; cantilever left and right exposed ; end vertical left and right exposed; Lumber DOL=1.60 plate grip DOL=1.60
3) Provide adequate drainage to prevent water ponding.
4) All plates are MT20 plates unless otherwise indicated.
5) This truss has been designed for a 10.0 psf bottom chord live load nonconcurrent with any other live loads.
6) * This truss has been designed for a live load of 20.0psf on the bottom chord in all areas where a rectangle 3-6-0 tall by 2-0-0 wide will fit between the bottom chord and any other members.
7) Ceiling dead load (5.0 psf) on member(s). D-E, I-J, E-Q, I-Q
8) Bottom chord live load (40.0 psf) and additional bottom chord dead load (0.0 psf) applied only to room. N-P
9) This truss is designed in accordance with the 2012 International Residential Code sections R502.11.1 and R802.10.2 and referenced standard ANSI/TPI 1.
10) "Semi-rigid pitchbreaks with fixed heels" Member end fixity model was used in the analysis and design of this truss.
11) Graphical purlin representation does not depict the size or the orientation of the purlin along the top and/or bottom chord.
12) Attic room checked for L/360 deflection.

**LOAD CASE(S)** Standard

| Job | Truss | Truss Type | Qty | Ply | GLEN MAYNARD |
|---|---|---|---|---|---|
| 15033089 | A1G | GABLE | 2 | 1 | Job Reference (optional) |

UFP Mid-Atlantic LLC, .

7.520 s May 8 2014 MiTek Industries, Inc. Fri Mar 27 09:54:35 2015 Page 1
ID:zAvmNtFMiYz4zEsZApg2B6zWner-2eMiFJSaaMxfsgrwXHraoblMdLJlbYqjaODZpWzWnVY

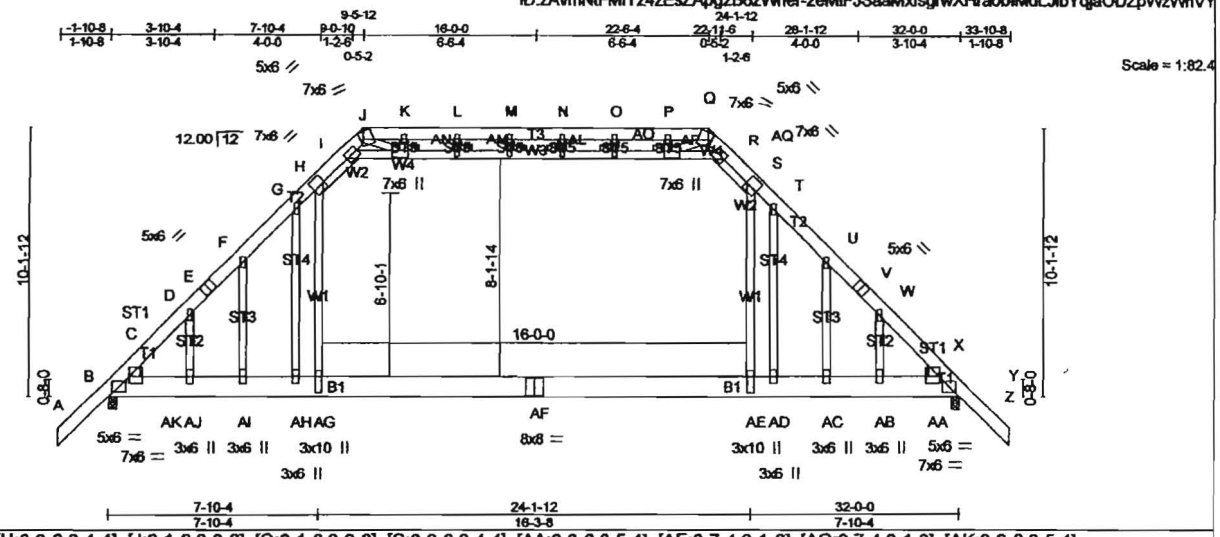


Plate Offsets (X,Y)-- [H:0-3-0,0-4-4], [J:0-1-8,0-3-8], [Q:0-1-8,0-3-8], [S:0-3-0,0-4-4], [AA:0-3-0,0-5-4], [AE:0-7-4,0-1-8], [AG:0-7-4,0-1-8], [AK:0-3-0,0-5-4]

| LOADING (psf) | | SPACING- | 2-0-0 | CSI. | | DEFL. | in | (loc) | l/defl | L/d | PLATES | GRIP |
|---|---|---|---|---|---|---|---|---|---|---|---|---|
| TCLL | 30.0 | Plates Increase | 1.15 | TC | 0.73 | Vert(LL) | -0.37 | AE-AG | >999 | 240 | MT20 | 244/190 |
| TCDL | 10.0 | Lumber Increase | 1.15 | BC | 0.88 | Vert(TL) | -0.51 | AE-AG | >750 | 180 | | |
| BCLL | 0.0 * | Rep Stress Incr | YES | WB | 0.82 | Horz(TL) | 0.04 | Y | n/a | n/a | | |
| BCDL | 10.0 | Code IRC2012/TPI2007 | | (Matrix-M) | | Attic | -0.30 | AE-AG | 652 | 360 | Weight: 330 lb | FT = 4% |

**LUMBER-**
TOP CHORD 2x6 SP No.2
BOT CHORD 2x10 SP No.1
WEBS 2x4 SP No.3 "Except"
W1: 2x4 SP No.2
OTHERS 2x4 SP No.3

**BRACING-**
TOP CHORD Structural wood sheathing directly applied or 3-4-0 oc purlins, except
2-0-0 oc purlins (4-9-6 max.): J-Q.
BOT CHORD Rigid ceiling directly applied or 10-0-0 oc bracing. Except:
8-7-14 oc bracing: AE-AG.
JOINTS 1 Brace at Jt(s): AL, AM, AN, AO, AP, AQ

**REACTIONS.** (lb/size) B=1832/0-3-8, Y=1832/0-3-8
Max Horz B=-222(LC 6)
Max Grav B=2052(LC 2), Y=2052(LC 2)

**FORCES.** (lb) - Maximum Compression/Maximum Tension
TOP CHORD A-B=0/106, B-C=-2454/0, C-D=-2486/0, D-E=-2435/0, E-F=-2361/0, F-G=-2558/0, G-H=-2698/0, H-I=-1650/3, I-J=-621/174, Q-R=-621/174, R-S=-1650/3, S-T=-2698/0, T-U=-2558/0, U-V=-2361/0, V-W=-2435/0, W-X=-2486/0, X-Y=-2454/0, Y-Z=0/106, J-K=-1612/287, K-L=-1612/287, L-M=-1612/287, M-N=-1612/287, N-O=-1612/287, O-P=-1612/287, P-Q=-1612/287
BOT CHORD B-AK=0/1749, AJ-AK=0/1748, AI-AJ=0/1748, AH-AI=0/1747, AG-AH=0/1746, AF-AG=0/1749, AE-AF=0/1749, AD-AE=0/1746, AC-AD=0/1747, AB-AC=0/1747, AA-AB=0/1748, Y-AA=0/1748
WEBS I-AN=-1903/125, AM-AN=-996/442, AL-AM=-996/442, AL-AO=-996/442, AO-AP=-996/442, AP-AQ=-996/442, R-AQ=-1903/125, H-AG=0/1671, S-AE=0/1671, M-AL=-14/17, L-AM=-17/16, K-AN=-803/163, G-AH=-443/70, F-AI=-332/81, D-AJ=-129/94, C-AK=-81/58, N-AO=-14/17, O-AP=-17/16, P-AQ=-803/163, T-AD=-443/70, U-AC=-332/80, W-AB=-129/94, X-AA=-82/59, J-AN=-346/1984, Q-AQ=-346/1984

**NOTES-**
1) Unbalanced roof live loads have been considered for this design.
2) Wind: ASCE 7-10; Vult=115mph (3-second gust) V(IRC2012)=91mph; TCDL=6.0psf; BCDL=6.0psf; h=25ft; Cat. II; Exp B; enclosed; MWFRS (envelope) gable end zone; cantilever left and right exposed ; end vertical left and right exposed; Lumber DOL=1.60 plate grip DOL=1.60
3) Truss designed for wind loads in the plane of the truss only.
4) Provide adequate drainage to prevent water ponding.
5) All plates are 2x5 MT20 unless otherwise indicated.
6) The solid section of the plate is required to be placed over the splice line at joint(s) AF.
7) Plate(s) at joint(s) AF checked for a plus or minus 2 degree rotation about its center.
8) Gable studs spaced at 2-0-0 oc.
9) This truss has been designed for a 10.0 psf bottom chord live load nonconcurrent with any other live loads.
10) * This truss has been designed for a live load of 20.0psf on the bottom chord in all areas where a rectangle 3-6-0 tall by 2-0-0 wide will fit between the bottom chord and any other members.
11) Ceiling dead load (5.0 psf) on member(s). H-I, R-S, I-AN, AM-AN, AL-AM, AL-AO, AO-AP, AP-AQ, R-AQ
12) Bottom chord live load (40.0 psf) and additional bottom chord dead load (0.0 psf) applied only to room. AE-AG
13) This truss is designed in accordance with the 2012 International Residential Code sections R502.11.1 and R802.10.2 and referenced standard ANSI/TPI 1.
14) "Semi-rigid pitchbreaks with fixed heels" Member end fixity model was used in the analysis and design of this truss.
15) Graphical purlin representation does not depict the size or the orientation of the purlin along the top and/or bottom chord.
16) Attic room checked for L/360 deflection.

**LOAD CASE(S)** Standard

| Job | Truss | Truss Type | Qty | Ply | GLEN MAYNARD |
|---|---|---|---|---|---|
| 15033089 | C1 | PIGGYBACK | 21 | 1 | Job Reference (optional) |

UFP Mid-Atlantic LLC, .

7.520 s May 8 2014 MiTek Industries, Inc. Fri Mar 27 09:54:40 2015 Page 1
ID:GHIPt8kZTEV1GcraaOIlv8zWnWT-Ob9bJ1WjPuZyyRktKqRfVe?GdM76GzrSkgxdKUjzWnVT

Scale = 1:48.8

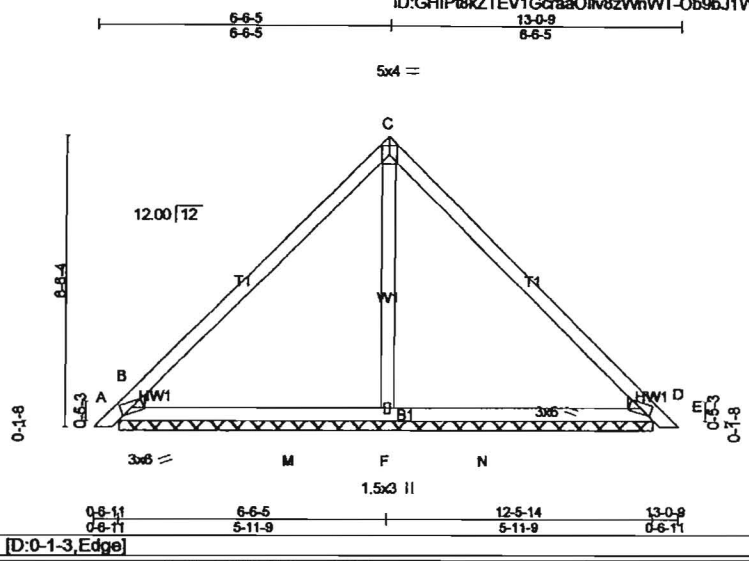


Plate Offsets (X,Y)-- [B:0-1-3,Edge], [D:0-1-3,Edge]

| LOADING (psf) | | SPACING- | 2-0-0 | CSI. | | DEFL. | in | (loc) | l/defl | L/d | PLATES | GRIP |
|---|---|---|---|---|---|---|---|---|---|---|---|---|
| TCLL | 30.0 | Plates Increase | 1.15 | TC | 0.52 | Vert(LL) | 0.01 | E | n/r | 120 | MT20 | 244/190 |
| TCDL | 10.0 | Lumber Increase | 1.15 | BC | 0.48 | Vert(TL) | 0.01 | E | n/r | 90 | | |
| BCLL | 0.0 * | Rep Stress Incr | YES | WB | 0.13 | Horz(TL) | 0.01 | B | n/a | n/a | | |
| BCDL | 10.0 | Code IRC2012/TPI2007 | | (Matrix-M) | | | | | | | Weight: 55 lb | FT = 4% |

**LUMBER-**
TOP CHORD 2x4 SP No.2
BOT CHORD 2x4 SP No.2
WEBS 2x4 SP No.3
WEDGE
Left: 2x4 SP No.2, Right: 2x4 SP No.2

**BRACING-**
TOP CHORD Structural wood sheathing directly applied or 6-0-0 oc purlins.
BOT CHORD Rigid ceiling directly applied or 10-0-0 oc bracing.

**REACTIONS.** (lb/size) B=449/11-11-3, D=449/11-11-3, F=352/11-11-3, B=449/11-11-3, D=449/11-11-3
Max Horz B=-122(LC 6)
Max UpliftB=-40(LC 8), D=-53(LC 9)
Max Grav B=449(LC 1), D=449(LC 1), F=438(LC 15), B=449(LC 1), D=449(LC 1)

**FORCES.** (lb) - Maximum Compression/Maximum Tension
TOP CHORD A-B=0/20, B-C=-578/142, C-D=-577/141, D-E=0/20
BOT CHORD B-M=-859/1979, F-M=-18/141, F-N=-18/141, D-N=-795/1908
WEBS C-F=-187/0

**NOTES-**
1) Unbalanced roof live loads have been considered for this design.
2) Wind: ASCE 7-10; Vult=115mph (3-second gust) V(IRC2012)=91mph; TCDL=6.0psf; BCDL=6.0psf; h=25ft; Cat. II; Exp B; enclosed; MWFRS (envelope) gable end zone; cantilever left and right exposed ; end vertical left and right exposed; Lumber DOL=1.60 plate grip DOL=1.60
3) Gable requires continuous bottom chord bearing.
4) This truss has been designed for a 10.0 psf bottom chord live load nonconcurrent with any other live loads.
5) * This truss has been designed for a live load of 20.0psf on the bottom chord in all areas where a rectangle 3-6-0 tall by 2-0-0 wide will fit between the bottom chord and any other members, with BCDL = 10.0psf.
6) Provide mechanical connection (by others) of truss to bearing plate capable of withstanding 40 lb uplift at joint B, 53 lb uplift at joint D, 40 lb uplift at joint B and 53 lb uplift at joint D.
7) This truss is designed in accordance with the 2012 International Residential Code sections R502.11.1 and R802.10.2 and referenced standard ANSI/TPI 1.
8) "Semi-rigid pitchbreaks with fixed heels" Member end fixity model was used in the analysis and design of this truss.
9) See standard piggyback truss connection detail for connection to base truss.

**LOAD CASE(S)** Standard

| Job | Truss | Truss Type | Qty | Ply | GLEN MAYNARD |
|---|---|---|---|---|---|
| 15033089 | A1L | ATTIC | 1 | 2 | Job Reference (optional) |

UFP Mid-Atlantic LLC, .

7.520 s May 8 2014 MiTek Industries, Inc. Fri Mar 27 09:54:39 2015 Page 1
ID:zAvmNtFMiYz4zEsZApg2B6zWner-wPbD5hV4ebR5KH9hm6wWzRT3eyi6XMpJV0BmyHzWnVU

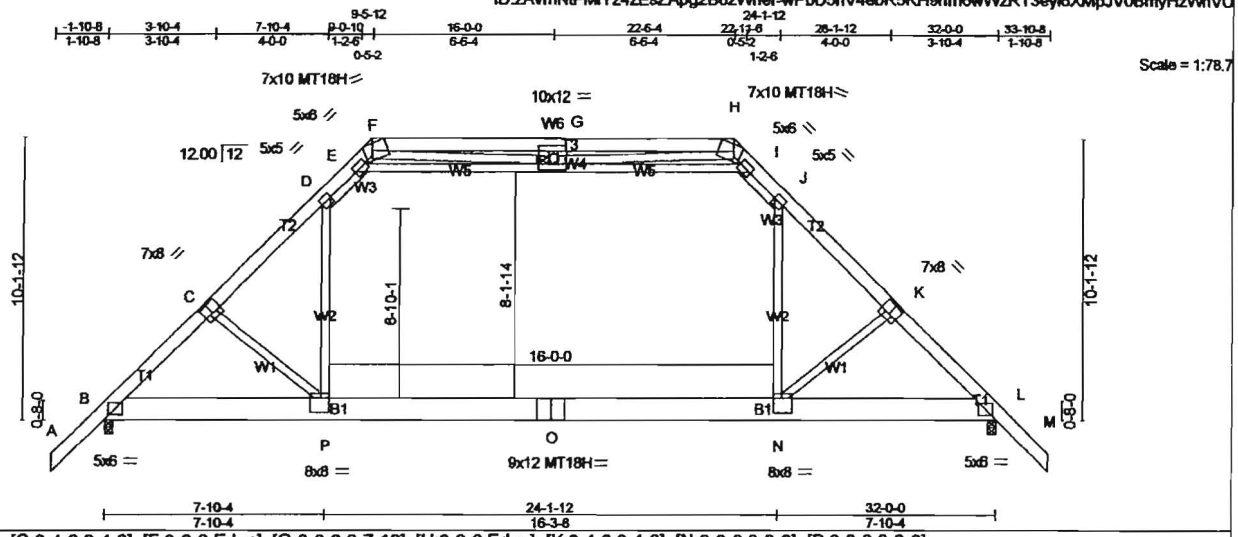


Plate Offsets (X,Y)— [C:0-4-0,0-4-8], [F:0-3-8,Edge], [G:0-6-0,0-7-12], [H:0-3-8,Edge], [K:0-4-0,0-4-8], [N:0-3-8,0-6-0], [P:0-3-8,0-6-0]

| LOADING (psf) | | SPACING- 3-0-0 | | CSI. | | DEFL. | in | (loc) | l/defl | L/d | PLATES | GRIP |
|---|---|---|---|---|---|---|---|---|---|---|---|---|
| TCLL | 30.0 | Plates Increase | 1.15 | TC | 0.66 | Vert(LL) | -0.32 | N-P | >999 | 240 | MT20 | 244/190 |
| TCDL | 10.0 | Lumber Increase | 1.15 | BC | 0.79 | Vert(TL) | -0.45 | N-P | >847 | 180 | MT18H | 244/190 |
| BCLL | 0.0 * | Rep Stress Incr | NO | WB | 0.82 | Horz(TL) | 0.03 | L | n/a | n/a | | |
| BCDL | 10.0 | Code IRC2012/TPI2007 | | (Matrix-M) | | Attic | -0.26 | N-P | 761 | 360 | Weight: 632 lb | FT = 4% |

**LUMBER-**
TOP CHORD 2x6 SP No.2
BOT CHORD 2x10 SP No.1
WEBS 2x4 SP No.3 *Except*
W2: 2x4 SP No.2

**BRACING-**
TOP CHORD 2-0-0 oc purlins (6-0-0 max.)
(Switched from sheeted: Spacing > 2-0-0).
BOT CHORD Rigid ceiling directly applied or 10-0-0 oc bracing.
JOINTS 1 Brace at Jt(s): F, H, Q

**REACTIONS.** (lb/size) B=2747/0-3-8, L=2747/0-3-8
Max Horz B=332(LC 7)
Max Grav B=3078(LC 2), L=3078(LC 2)

**FORCES.** (lb) - Maximum Compression/Maximum Tension
TOP CHORD A-B=0/159, B-C=-4103/0, C-D=-3880/0, D-E=-2476/9, E-F=-1073/374, H-I=-1073/374, I-J=-2476/10, J-K=-3880/0, K-L=-4103/0, L-M=0/159, F-G=-3177/718, G-H=-3177/718
BOT CHORD B-P=0/2884, O-P=0/2632, N-O=0/2632, L-N=0/2807
WEBS E-Q=-2929/106, I-Q=-2930/107, D-P=0/1803, J-N=0/1803, G-Q=-479/141, C-P=-452/256, K-N=-452/257, F-Q=-620/2979, H-Q=-620/2979

**NOTES-**
1) 2-ply truss to be connected together with 10d (0.131"x3") nails as follows:
Top chords connected as follows: 2x6 - 2 rows staggered at 0-9-0 oc.
Bottom chords connected as follows: 2x10 - 2 rows staggered at 0-9-0 oc.
Webs connected as follows: 2x4 - 1 row at 0-9-0 oc.
2) All loads are considered equally applied to all plies, except if noted as front (F) or back (B) face in the LOAD CASE(S) section. Ply to ply connections have been provided to distribute only loads noted as (F) or (B), unless otherwise indicated.
3) Unbalanced roof live loads have been considered for this design.
4) Wind: ASCE 7-10; Vult=115mph (3-second gust) V(IRC2012)=91mph; TCDL=6.0psf; BCDL=6.0psf; h=25ft; Cat. II; Exp B; enclosed; MWFRS (envelope) gable end zone; cantilever left and right exposed ; end vertical left and right exposed; Lumber DOL=1.60 plate grip DOL=1.60
5) Provide adequate drainage to prevent water ponding.
6) All plates are MT20 plates unless otherwise indicated.
7) This truss has been designed for a 10.0 psf bottom chord live load nonconcurrent with any other live loads.
8) * This truss has been designed for a live load of 20.0psf on the bottom chord in all areas where a rectangle 3-6-0 tall by 2-0-0 wide will fit between the bottom chord and any other members.
9) Ceiling dead load (5.0 psf) on member(s). D-E, I-J, E-Q, I-Q
10) Bottom chord live load (40.0 psf) and additional bottom chord dead load (0.0 psf) applied only to room. N-P
11) This truss is designed in accordance with the 2012 International Residential Code sections R502.11.1 and R802.10.2 and referenced standard ANSI/TPI 1.
12) "Semi-rigid pitchbreaks with fixed heels" Member end fixity model was used in the analysis and design of this truss.
13) Graphical purlin representation does not depict the size or the orientation of the purlin along the top and/or bottom chord.
14) Attic room checked for L/360 deflection.

**LOAD CASE(S)** Standard

| Job | Truss | Truss Type | Qty | Ply | GLEN MAYNARD |
|---|---|---|---|---|---|
| 15033089 | C1G | GABLE | 2 | 1 | Job Reference (optional) |

UFP Mid-Atlantic LLC, . 7.520 s May 8 2014 MiTek Industries, Inc. Fri Mar 27 09:54:41 2015 Page 1
ID:GHIPt8kZTEV1GcraaOlfv8zWnWT-sojzWNXLAChpabJ4uXy_2sYX0ma4?SEczKgt0AzWnVS

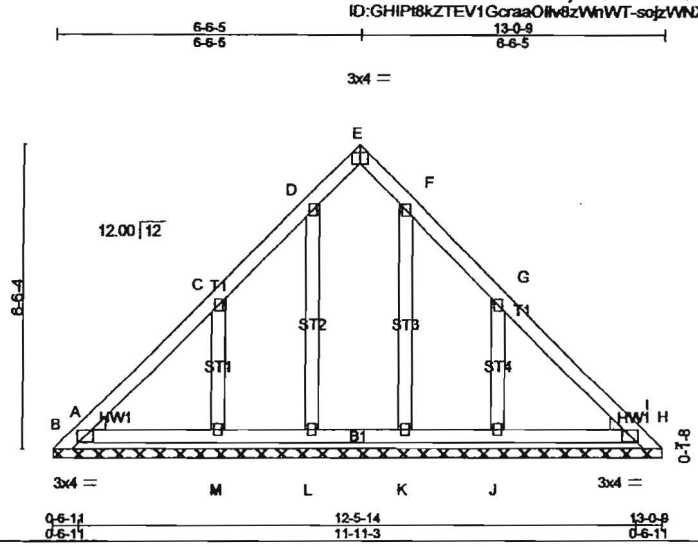


Plate Offsets (X,Y)-- [E:0-2-0,Edge]

| LOADING (psf) | | SPACING- 2-0-0 | | CSL | | DEFL. | in | (loc) | l/defl | L/d | PLATES | GRIP |
|---|---|---|---|---|---|---|---|---|---|---|---|---|
| TCLL | 30.0 | Plates Increase | 1.15 | TC | 0.16 | Vert(LL) | n/a | - | n/a | 999 | MT20 | 244/190 |
| TCDL | 10.0 | Lumber Increase | 1.15 | BC | 0.05 | Vert(TL) | n/a | - | n/a | 999 | | |
| BCLL | 0.0 * | Rep Stress Incr | YES | WB | 0.06 | Horz(TL) | 0.00 | H | n/a | n/a | | |
| BCDL | 10.0 | Code IRC2012/TPI2007 | | (Matrix) | | | | | | | Weight: 69 lb | FT = 4% |

**LUMBER-**
TOP CHORD 2x4 SP No.2
BOT CHORD 2x4 SP No.2
OTHERS 2x4 SP No.3
WEDGE
Left: 2x4 SP No.2, Right: 2x4 SP No.2

**BRACING-**
TOP CHORD Structural wood sheathing directly applied or 6-0-0 oc purlins.
BOT CHORD Rigid ceiling directly applied or 10-0-0 oc bracing.

**REACTIONS.** (lb/size) A=-161/13-0-9, I=-160/13-0-9, B=375/13-0-9, H=374/13-0-9, L=151/13-0-9, M=269/13-0-9, K=152/13-0-9, J=269/13-0-9
Max Horz A=-122(LC 6)
Max Uplift A=-233(LC 15), I=-164(LC 16), B=-31(LC 8), L=-19(LC 8), M=-110(LC 8), K=-13(LC 9), J=-111(LC 9)
Max Grav A=127(LC 8), I=65(LC 9), B=389(LC 15), H=374(LC 1), L=155(LC 15), M=274(LC 15), K=152(LC 1), J=275(LC 16)

**FORCES.** (lb) - Maximum Compression/Maximum Tension
TOP CHORD A-B=-165/234, B-C=-182/90, C-D=-110/32, D-E=-76/31, E-F=-76/27, F-G=-107/20, G-H=-175/81, H-I=-39/120
BOT CHORD B-M=-56/152, L-M=-56/152, K-L=-56/152, J-K=-56/152, H-J=-56/152
WEBS D-L=-120/43, C-M=-216/137, F-K=-116/36, G-J=-217/138

**NOTES-**
1) Unbalanced roof live loads have been considered for this design.
2) Wind: ASCE 7-10; Vult=115mph (3-second gust) V(IRC2012)=91mph; TCDL=6.0psf; BCDL=6.0psf; h=25ft; Cat. II; Exp B; enclosed; MWFRS (envelope) gable end zone; cantilever left and right exposed ; end vertical left and right exposed; Lumber DOL=1.60 plate grip DOL=1.60
3) Truss designed for wind loads in the plane of the truss only.
4) All plates are 2x3 MT20 unless otherwise indicated.
5) Gable requires continuous bottom chord bearing.
6) Gable studs spaced at 2-0-0 oc.
7) This truss has been designed for a 10.0 psf bottom chord live load nonconcurrent with any other live loads.
8) * This truss has been designed for a live load of 20.0psf on the bottom chord in all areas where a rectangle 3-6-0 tall by 2-0-0 wide will fit between the bottom chord and any other members.
9) Provide mechanical connection (by others) of truss to bearing plate capable of withstanding 233 lb uplift at joint A, 164 lb uplift at joint I, 31 lb uplift at joint B, 19 lb uplift at joint L, 110 lb uplift at joint M, 13 lb uplift at joint K and 111 lb uplift at joint J.
10) This truss is designed in accordance with the 2012 International Residential Code sections R502.11.1 and R802.10.2 and referenced standard ANSI/TPI 1.
11) "Semi-rigid pitchbreaks with fixed heels" Member end fixity model was used in the analysis and design of this truss.
12) See standard piggyback truss connection detail for connection to base truss.

**LOAD CASE(S)** Standard

N/F MARC A. OLIVER & CHRISTIE L. OLIVER (D.B. 1234, PG. 793)

N/F CONNIE MCELFRESH (D.B. 760, PG. 1028)

N/F GEORGE L. MARION II (DEED INSTRUMENT 2002018444)

N/F JAMES E. SPANGLER (D.B. 1358, PG. 105)

N/F MICHAEL ALLEN HALE & CONNIE E. HALE (D.B. 1263, PG. 285)

N/F RODNEY WOODS & MELISSA WOODS (DEED INSTR. 2004007973)

N/F LEONARD M. MILLINER & PHYLLIS A. MILLINER (D.B. 1228, PG. 725)

N/F ROY CURTIS CRAIGHEAD & CAROLA JEANNE CRAIGHEAD (D.B. 951, PG. 597)

N/F RICHARD E. BASS & SANDRA KEELE BASS (D.B. 978, PG. 12)

N/F KYLE CONNER? (D.B. 48, PG. 56)

N/F MELINDA K. SMITH & GEORGE R. SMITH III (D.B. 939, PG. 799)

RECORD P.B. 22, PG. 310

N41°40'19"E 1180.39'

S62°42'57"E 273.11'

S49°46'15"E 242.54'

S25°50'16"E 238.41'

S41°44'50"E 269.78'

S02°43'39"E 243.99'

N80°06'17"W 21.65'

S14°10'24"E 108.27'

S71°09'22"E 291.93'

N65°06'00"W

S05°55'33"W 298.21'

N05°55'33"E 298.21'

S27°29'06"W 102.70'

S21°22'24"W 166.09'

S28°11'18"W 72.38'

N50°10'57"W 10.36'

N07°01'24"E

S82°18'53"W 180.27'

N36°27'19"W 39.93'

N17°14'14"W 78.67'

S61°42'24"W 345.05'

TIE-LINE ONLY N03°50'28"W 115.71'

TIE-LINE ONLY S62°41'17"W 346.61'

Proposed Garage 40'

3-story Dryvit Siding Stone DWL

Paved Driveway

PARCEL 1

3373315 SQ. FT.
77.441 ACRES

PARCEL 2

1238330 SQ. FT.
28.428 ACRES

OVERLAP REFERENCE: P.B. 17, PG. 190

℄ GENERALLY FOLLOWS W. SIDE ROAD

℄ GENERALLY FOLLOWS ℄ OF D-W ROAD

℄ OF D-W ROAD

ROD SET IN ℄ DRWYROAD @ R/W

ROD SET ON LINE

ROD SET 4' W. 10" POPLAR MKD

ROD SET NW EDGE FLAT RIDGE

ROD SET E EDGE FLAT RIDGE

ROD SET ON TOP OF RIDGE

ROD SET 7' SW & 11' NW 14" OAK & 11" NW 10" N. LINE

ROD SET 7' TOP 12" BEECH MKD

ROD SET @ NW BASE 6" PINE N. EDGE KNOB

ROD SET AT FALLEN BASE 4' NW 12" MKD POPLAR

ROD SET 1' NLY THRU OF DRWYROAD

ROD SET @ 28" BL. WILLOW

POST FND

POINT IN FALLEN W. O. STUMP

ROD FND & USED FOR LINE BY LG. TWIN WALNUT

24" TWIN WALNUT ON LINE

24" BEECH

16" BEECH WITNESS BY ROD

ROD FND NOT USED

ROD FND 1072.31'

BLAZED 6" R. OAK

BLAZED 12" CEDAR

BLAZED 22" W. OAK

BLAZED 12" BEECH

TREE STAND

WOOD SHED

SPRING BOX

GRAVEL DRIVEWAY

1 1/2 - STY. MASONRY & WOOD S/D. DWL # 1680

POLE

OHU

TELE PED

ALLS HOLLOW ROAD (30' R/W)

END STATE MAINTENANCE

L1 L2 L3 L4 L5 L6 L7 L8 L9 L10 L11 L12 L13 L14 L15 L16 L17 L18 L19 L20 L21 L22 L23 L24 L25 L26 L27 L28 L29 L30 L31 L32 L33 L34 L35 L36

C1 C2 C3 C4 C5 C6 C7 C8

see Inst. No 0500598

VIRGINIA: In the Office of the Circuit Court of Montgomery C
31 day of May, 2005. The fore
instrument was this day presented in said Office and with cert
annexed admitted to record at 4:12 o'clock P M.

Teste: ALLAN C. BURKE, C
By Claudia Owen

COMMONWEALTH OF VIRGINIA
MARVI D. STINE
No. 1654

# PLAT
SHOWING
MINOR SUBDIVISION
FOR

CHARLES L. FOSTER &
DOTTE H. FOSTER &
CLIFFORD S. COSTIGAN
IRIS FOSTER COSTIGAN
DONALD T POFF &
ILA JEAN FOSTER POFF
RICHARD D. FOSTER &
BARBARA B. FOSTER

LOCATED IN
SHAWSVILLE MAGISTERIAL DISTRICT
MONTGOMERY COUNTY, VIRGINIA
12 MAY 2005 SCALE 1" = 200'